EDS84DPS424
13553590

L-force *Drives*

Translation of the original operating instructions

8400 protec *0.75 ... 7.5 kW*

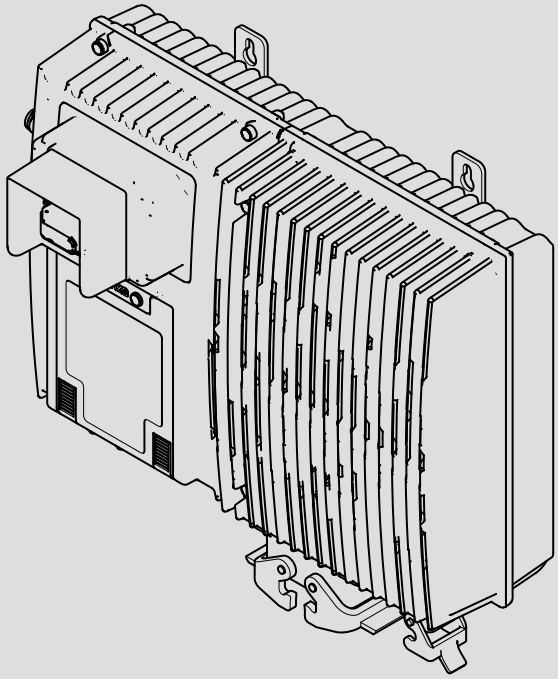

E84Dxxxxxxx HighLine/StateLine/EMS

Decentralised frequency inverter

Lenze

1 About this documentation . . . 8
1.1 Document history . . . 9
1.2 Conventions used . . . 9
1.3 Terms and abbreviations used . . . 10
1.4 Notes used . . . 13

2 Safety instructions . . . 14
2.1 General safety and application notes for Lenze controllers . . . 14
2.2 General safety and application notes for Lenze motors . . . 17
2.3 Residual hazards . . . 20

3 Product description . . . 21
3.1 Device features . . . 21
3.2 Identification . . . 22
3.3 Type code . . . 23
3.4 Overview of standard devices . . . 27
3.5 Communication . . . 29
3.5.1 CAN port . . . 29
3.5.2 Infrared remote control receiver . . . 30
3.5.3 Extensions in EMS version . . . 30
3.5.4 Infrared interface . . . 31
3.6 Concepts for the mains connection . . . 32
3.6.1 Concepts for the connection of individual axes . . . 32
3.6.2 Concepts for the connection of the power bus . . . 34
3.7 EMS mains connection concepts . . . 36
3.7.1 Half wave (coded) . . . 36
3.7.2 Power wave . . . 37
3.7.3 DECA bus . . . 38
3.7.4 Inductive . . . 39

4 Technical data . . . 40
4.1 General data and operating conditions . . . 40
4.2 Rated data . . . 46
4.2.1 Overview . . . 46
4.2.2 Operation at rated mains voltage 400 V . . . 48
4.2.3 Operation at a rated mains voltage of 500 V . . . 51
4.3 Current characteristics . . . 54
4.4 Overcurrent operation . . . 56
4.5 Terminal description . . . 59

4.6 Supply concept of control voltage 61
4.6.1 Internal 24 V supply voltage 61
4.6.2 External supply voltage 24 V 62
4.7 Control terminals 64
4.7.1 Digital inputs 64
4.7.2 Digital outputs 65
4.7.3 Analog inputs 66
4.7.4 Synchronous serial interface (SSI) 66
4.7.5 Remote control (IrRC) 66
4.7.6 Interfaces of the EMS version 67
4.7.7 Motor holding brake connection 68

5 Mechanical installation 70
5.1 Important notes 70
5.2 Dimensions 71
5.3 Mounting clearance 72

6 Electrical installation - HighLine/StateLine version 73
6.1 Important notes 73
6.1.1 Electrical isolation 76
6.1.2 Device protection 76
6.1.3 Maximum motor cable length 77
6.1.4 Motor protection 77
6.2 Safety instructions for the installation according to UL or UR 78
6.3 Safety instructions for the installation according to UL or UR 79
6.4 Installation according to EMC (installation of a CE-typical drive system) 80
6.4.1 Shielding 80
6.4.2 Motor cable 81
6.4.3 Control cables 82
6.4.4 Wiring 83
6.4.5 Detecting and eliminating EMC interferences 85
6.5 Devices in a power range of 0.75 ... 7.5 kW (3/PE AC 400 V) 86
6.5.1 Example circuits 86
6.5.2 Terminal assignment of the power connections 87
6.6 Control terminals 92
6.6.1 Diagnostics 92
6.6.2 Analog input 93
6.6.3 Digital inputs and outputs 96
6.6.4 Synchronous serial interface (SSI) 99

6.7 Communication 100
6.7.1 PROFINET® / EtherNet/IP™ 101
6.7.2 PROFIBUS® 101
6.7.3 CANopen® 102
6.7.4 CAN on board 102
6.8 Safety engineering 103

7 Electrical installation - EMS version 106

7.1 Important notes 106
7.1.1 Electrical isolation 109
7.1.2 Device protection 109
7.1.3 Maximum motor cable length 110
7.1.4 Motor protection 110
7.2 Safety instructions for the installation according to UL or UR 111
7.3 Safety instructions for the installation according to UL or UR 112
7.4 Installation according to EMC (installation of a CE-typical drive system) 113
7.4.1 Shielding 113
7.4.2 Motor cable 114
7.4.3 Control cables 115
7.4.4 Wiring 116
7.4.5 Detecting and eliminating EMC interferences 118
7.5 Devices in a power range of 0.75 ... 4 kW (3/PE AC 400 V) 119
7.5.1 Example circuits 119
7.5.2 Terminal assignment of the power connections 122
7.6 Control terminals 128
7.6.1 Diagnostics 128
7.6.2 Digital inputs and outputs 130
7.6.3 Synchronous serial interface (SSI) 134
7.6.4 Interfaces RS485/422 PLC 135
7.6.5 Interfaces RS485 PLC 136
7.6.6 Interfaces RS422 PLC 137
7.7 Communication 138
7.7.1 CANopen 139
7.7.2 CANopen master PLC 139

8 Commissioning 140

8.1 Before switching on 141
8.2 Preparing the commissioning procedure 142
8.3 Quick commissioning 145
8.3.1 Keypad control 146
8.3.2 Terminal control 148

9 Braking operation 150
9.1 Braking operation without brake resistor 150
9.2 Braking operation with internal brake resistor 153
9.3 Braking operation with external brake resistor 153
9.3.1 Selection of the brake resistors 154
9.3.2 Wiring of brake resistor 155
9.4 Operation with spring-applied brake 158
9.4.1 Introduction 158
9.4.2 Wiring 160

10 Diagnostics 161
10.1 Display of operating data, diagnostics 161
10.1.1 Status display via controller LEDs 161
10.1.2 Extensions in EMS version 163
10.1.3 Status display of the safety system via LEDs at the controller 164
10.1.4 Drive diagnostics via the integrated display 167
10.1.5 Drive diagnostics 172

11 Safety engineering 174
11.1 Introduction 174
11.2 Important notes 175
11.3 Overview of safety options 176

12 Accessories (overview) 178
12.1 Overview 178
12.2 System cables 179
12.2.1 Motor cable 179
12.2.2 Incremental HTL encoder 181
12.2.3 Connection of external brake resistor 182
12.2.4 Connection of safety sensors and actuators 183
12.3 Memory module 184
12.3.1 E84AYM10S 184
12.3.2 E84AYM30S 185
12.4 Diagnosis terminal 186
12.5 Infrared remote control (IrRC) 187
12.6 External brake resistors 188
12.7 Power supply units 189
12.8 EMS accessories 190

13 Appendix 191
13.1 Declarations of conformity 191

13.2 Ecodesign Directive 196
13.3 Index 197

1 About this documentation

Contents

These operating instructions contains the complete information on the intended use of the 8400 protec controllers in the StateLine and HighLine versions.

Validity

These operating instructions apply to decentralised 8400 protec frequency inverters with the following type designation:

Type designation	From HW	From SW
E84D**S**xxx... (StateLine)	VA	01.01
E84D**H**xxx... (HighLine)	VA	02.02
E84D**D**xxx... (EMS)	VA	01.00
E84D**E**xxx... (EMS)	VA	01.00
E84D**F**xxx... (EMS)	VA	01.00
E84D**L**xxx... (EMS)	VA	01.00
E84D**P**xxx... (EMS)	VA	01.00

Further information on the type code can be obtained from the ”Product description” chapter.

Target group

These operating instructions are intended for all persons who design, install, commission, and set 8400 protec controllers.

Tip!

Information and auxiliary devices related to the Lenze products can be found in the download area at

http://www.Lenze.com

1.1 Document history

Material number	Version			Description
13553590	6.2	09/2022	TD00	Complemented: Conformity UKCA, update
13553590	6.1	08/2019	TD15	Error corrections
13553590	6.0	05/2018	TD23	Update, error corrections
13446170	5.0	10/2013	TD15	Supplements by UL
13424171	4.1	04/2013	TD15	Extended up to 7.5 kW and corrections
13398961	3.0	05/2012	TD15	Additions and corrections
13382536	2.0	06/2011	TD15	Extended by EMS version
13368849	1.1	04/2011	TD15	General revision
13334905	1.0	04/2010	TD15	First edition

1.2 Conventions used

This documentation uses the following conventions to distinguish between different types of information:

Spelling of numbers		
Decimal separator	Point	In general, the decimal point is used. For instance: 1234.56
Warnings		
UL warnings	Ⓤ	Given in English and French
UR warnings		
Text		
Program name	» «	PC software For example: »Engineer«, »Global Drive Control« (GDC)
Icons		
Page reference	🕮	Reference to another page with additional information For instance: 🕮 16 = see page 16
Documentation reference		Reference to another documentation with additional information For example: EDKxxx = see documentation EDKxxx

1.3 Terms and abbreviations used

Axis, drive	Lenze controller combined with a motor or geared motor and other Lenze drive components
Basic insulation	Insulation providing basic protection against hazardous shock currents
Controller	Any frequency inverter, servo inverter, or DC speed controller
Device size	Used as generic term for a group of devices which have the same dimensions (depth, height and width) but different power ratings.
Double insulation	Basic insulation and additional insulation
Functional insulation	Insulation ensuring perfect operation
Holding brake	See motor holding brake
Motor holding brake	The motor holding brake serves to statically hold e.g. a position during the downtimes of a robot, travelling, synchronous, or hoist drive.
Reinforced insulation	Uniform insulation system, same protection as double insulation
Spring-applied brake	Design type of a (motor) holding brake (electromechanically released, spring-applied operation)
Standard device	Used as generic term when actions and features are described which are very similar or the same for different versions or device sizes, e.g. ● mechanical installation or ● power terminals
EMS	**E**lectrified **M**onorail **S**ystem, e.g. monorail overhead conveyors, automated guided vehicle systems
Half wave (coded)	Process for transmitting control signals via contact conductor Control bar and message bar, also with coding
Power wave	Process for transmitting control signals with mains voltage
DECA BUS	Process for transmitting control signals via rail bus
PLC	Programmable logic controller, compatible with IEC 61131
IrRC	Infrared remote control
IrDA	Infrared data interface
Cxxxxx/y	Subcode y of code Cxxxx (e.g. C0410/3 = subcode 3 of code C0410)
Xk/y	Terminal y on terminal strip Xk (e.g. X3/28 = terminal 28 on terminal strip X3)

AC	AC current or AC voltage
DC	DC current or DC voltage
V_{LR} [V]	Rated mains voltage
U_{DC} [V]	DC voltage
U_M [V]	Output voltage / voltage at the motor terminals
I_{LR} [A]	Rated mains current
I_{aR} [A]	Rated output current
I_{aM} [A]	Maximum output current
I_{PE} [mA]	Discharge current
P_R [kW]	Rated motor power
P_V [W]	Inverter power loss
P_{DC} [kW]	Power at the DC voltage end
S_R [kVA]	Apparent output power of the controller
M_R [Nm]	Rated torque
f_{max} [Hz]	Maximum frequency
L [mH]	Inductance
R [Ω]	Resistor
DIN	Deutsches Institut für Normung
EMC	Electromagnetic compatibility
EN	European standard
IEC	International Electrotechnical Commission
IP	International Protection Code
NEMA	National Electrical Manufacturers Association
VDE	Verband deutscher Elektrotechniker
CE	Communauté Européene
UL	Underwriters Laboratories

Terms and abbreviations of the safety system

Abbreviation	Meaning
24O	24 V voltage supply for non-safe monitoring
Cat.	Category according to EN 954-1 (valid until 30 November 2009)
DO	Non-safe feedback output
F-PLC	Safety PLC
GSDML	File containing device-specific data to establish PROFINET communication
GSE	File containing device-specific data to establish PROFIBUS communication
OFF state	Signal status of the safety sensors when they are activated or respond
ON state	Signal status of the safety sensors during normal operation
Opto supply	Optocoupler supply for controlling the drivers
OSSD	Output Signal Switching Device, tested signal output
PELV	Protective Extra Low Voltage
PL	Performance Level according to EN ISO 13849-1
PM	P/N switching signal paths
PP	P/P switching signal paths
PS	PROFIsafe
PWM	Pulse Width Modulation
S-Bus	Safety bus
SD-In	Safe input (Safe Digital Input)
SD-Out	Safe output (Safe Digital Output)
SELV	Safety Extra Low Voltage
SIA, SIB	Safe Input, channel A or B, respectively
SIL	Safety Integrity Level according to IEC 61508
SO	Integrated safety option

Abbreviation	Safety function
AIE	Error acknowledgement (Acknowledge In Error)
AIS	Restart acknowledgement (Acknowledge In Stop)
ES	Safe enable switch
OMS	Operation Mode Selector
SS1	Safe Stop 1
SSE	Safe Stop Emergency
STO	Safe Torque Off Formerly: Safe standstill

1.4 Notes used

The following pictographs and signal words are used in this documentation to indicate dangers and important information:

Safety instructions

Structure of safety instructions:

Danger!
(characterises the type and severity of danger)
Note
(describes the danger and gives information about how to prevent dangerous situations)

Pictograph and signal word	Meaning
Danger!	**Danger of personal injury through dangerous electrical voltage.** Reference to an imminent danger that may result in death or serious personal injury if the corresponding measures are not taken.
Danger!	**Danger of personal injury through a general source of danger.** Reference to an imminent danger that may result in death or serious personal injury if the corresponding measures are not taken.
Stop!	**Danger of property damage.** Reference to a possible danger that may result in property damage if the corresponding measures are not taken.

Application notes

Pictograph and signal word	Meaning
Note!	Important note to ensure troublefree operation
Tip!	Useful tip for simple handling
	Reference to another documentation

Special safety instructions and application notes

Pictograph and signal word	Meaning
Warnings!	**Safety note or application note for the operation according to UL or CSA requirements.** The measures are required to meet the requirements according to UL or CSA.
Warnings!	

2 Safety instructions

2.1 General safety and application notes for Lenze controllers

For your personal safety

Disregarding the following basic safety measures may lead to severe personal injury and damage to material assets:

- ► Use the product as intended.
- ► Never operate the product if damages are visible.
- ► Never operate the product unless fully assembled.
- ► Do not make any technical changes to the product.
- ► Only use the accessories approved for the product.
- ► Only use original spare parts of the manufacturer.
- ► Observe all regulations for the prevention of accidents, directives and laws applicable on site.
- ► Transport, installation, commissioning and maintenance work must only be carried out by qualified personnel.
  - – Observe IEC 364 and CENELEC HD 384 or DIN VDE 0100 and IEC report 664 or DIN VDE 0110 and all national regulations for the prevention of accidents.
  - – According to the basic safety information, qualified, skilled personnel are persons who are familiar with the assembly, installation, commissioning, and operation of the product and who have the qualifications necessary for their occupation.
- ► Observe all specifications in this documentation.
  - – This is the condition for safe and troublefree operation and the achievement of the specified product features.
  - – The procedural notes and circuit details described in this documentation are only proposals. It is up to the user to check whether they can be transferred to the particular applications. Lenze SE does not accept any liability for the suitability of the procedures and circuit proposals described.
- ► Lenze inverters (frequency inverters, servo inverters, DC speed controllers) and the accessory components can include live and moving parts (depending ontheir type of protection) during operation. Surfaces can be hot.
  - – Nonauthorized removal of the required cover, inappropriate use, incorrect installation or operation create the risk of severe injury to persons or damage to material assets.
  - – For more information, please see the documentation.
- ► High amounts of energy are produced in the drive. Therefore it is required to wear personal protective equipment (body protection, headgear, eye and ear protection, hand guard).

Application as directed

Inverters are components which are designed for installation in electrical systems or machines. They are not to be used as domestic appliances, but only for industrial purposes according to EN 6100032.

When inverters are installed into machines, commissioning (i.e. starting of the operation as directed) is prohibited until it is proven that the machine complies with the regulations of 2006/42/EC: Machinery Directive [UKCA: S.I. 2008/1597 - The Supply of Machinery (Safety) Regulations 2008]; EN 60204 must be observed.

Commissioning (i.e. starting of the operation as directed) is only allowed when there is compliance with 2014/30/EU: EMC Directive [UKCA: S.I. 2016/1091 - The Electromagnetic Compatibility Regulations 2016].

The inverters meet the requirements of 2014/35/EU: Low-Voltage Directive [UKCA: S.I. 2016/1101 - The Electrical Equipment (Safety) Regulations 2016]. The harmonised standard EN 61800-5-1 applies to the inverters.

The technical data and supply conditions can be obtained from the nameplate and the documentation. They must be strictly observed.

Warning: Inverters are products which can be installed in drive systems of category C2 according to EN 61800-3. These products can cause radio interferences in residential areas. In this case, special measures can be necessary.

Transport, storage

Observe the notes on transport, storage, and appropriate handling.

Observe the climatic conditions according to the technical data.

Installation

The inverters must be installed and cooled according to the instructions given in the corresponding documentation.

The ambient air must not exceed degree of pollution 2 according to EN 61800-5-1.

Ensure proper handling and avoid excessive mechanical stress. Do not bend any components and do not change any insulation distances during transport or handling. Donot touch any electronic components and contacts.

Inverters contain electrostatic sensitive devices which can easily be damaged by inappropriate handling. Do not damage or destroy any electrical components since thismight endanger your health!

Electrical connection

When working on live inverters, observe the applicable national regulations for the prevention of accidents.

The electrical installation must be carried out according to the appropriate regulations (e.g. cable cross-sections, fuses, PE connection). Additional information can be obtained from the documentation.

This documentation contains information on installation in compliance with EMC (shielding, earthing, filter, and cables). These notes must also be observed for CE-markedinverters. The manufacturer of the system is responsible for compliance with the limit values demanded by EMC legislation.

Lenze inverters may cause a DC current in the PE conductor. If a residual current device (RCD) is used for protection against direct or indirect contact for an inverter withthree-phase supply, only a residual current device (RCD) of type B is permissible on the supply side of the inverter. If the inverter has a single-phase supply, a residual current device (RCD) of type A is also permissible. Apart from using a residual current device (RCD), other protective measures can be taken as well, e.g. electrical isolation by double or reinforced insulation or isolation from the supply system by means of a transformer.

Operation

If necessary, systems including inverters must be equipped with additional monitoring and protection devices according to the valid safety regulations (e.g. law on technical equipment, regulations for the prevention of accidents). The inverters can be adapted to your application. Please observe the corresponding information given in the documentation.

After the inverter has been disconnected from the supply voltage, all live components and power terminals must not be touched immediately because capacitors can still be charged. Please observe the corresponding stickers on the inverter.

All protection covers and doors must be shut during operation.

Note for UL-approved systems with installed inverters: UL warnings are notes that only apply to UL systems. The documentation contains special UL notes.

Safety functions

Certain inverter versions support safety functions (e.g. ”Safe torque off”, formerly ”Safe standstill”) according to the requirements of 2006/42/EC: Machinery Directive [UKCA: S.I. 2008/1597 - The Supply of Machinery (Safety) Regulations 2008]. The notes on the integrated safety system provided in this documentation must be observed.

Maintenance and servicing

The inverters do not require any maintenance if the prescribed operating conditions are observed.

Disposal

Recycle metal and plastic materials. Ensure professional disposal of assembled PCBs.

The product-specific safety and application notes given in these instructions must be observed!

2.2 General safety and application notes for Lenze motors

General

Low-voltage machines have dangerous, live and rotating parts as well as possibly hot surfaces.

Synchronous machines induce voltages at open terminals during operation.

All operations serving transport, connection, commissioning and maintenance are to be carried out by skilled, responsible technical personnel (observe EN 50110-1 (VDE 0105-1) and IEC 60364). Improper handling can cause severe injuries or damages.

Lowvoltage machines may only be operated under the conditions that are indicated in the section ”Application as directed”.

The conditions at the place of installation must comply with the data given on the nameplate and in the documentation.

Application as directed

Lowvoltage machines are intended for commercial installations. They comply with the harmonised standards of the series IEC/EN 60034 (VDE 0530). Their use in potentially explosive atmospheres is prohibited unless they are expressly intended for such use (follow additional instructions).

Lowvoltage machines are components for installation into machines as defined in 2006/42/EC: Machinery Directive [UKCA: S.I. 2008/1597 - The Supply of Machinery (Safety) Regulations 2008]. Commissioning is prohibited until the conformity of the end product with this directive has been established (follow i. a. EN 60204-1).

Lowvoltage machines with IP23 protection or less are only intended for outdoor use when applying special protective features.

The integrated brakes must not be used as safety brakes. It cannot be ruled out that factors which cannot be influenced, such as oil ingress due to a defective Aside shaft seal, cause a brake torque reduction.

Transport, storage

Damages must be reported immediately upon receipt to the forwarder; if required, commissioning must be excluded. Tighten screwedin ring bolts before transport. They are designed for the weight of the lowvoltage machines, do not apply extra loads. If necessary, use suitable and adequately dimensioned means of transport (e. g. rope guides).

Remove transport locking devices before commissioning. Reuse them for further transport. When storing low-voltage machines, ensure a dry, dustfree and low-vibration ($v_{eff} \leq 0.2$ mm/s) environment (bearing damage while being stored).

Installation

Ensure an even surface, solid foot/flange mounting and exact alignment if a direct clutch is connected. Avoid resonances with the rotational frequency and double mains frequency which may be caused by the assembly. Turn rotor by hand, listen for unusual slipping noises. Check the direction of rotation when the clutch is not active (observe section ”Electrical connection”).

Use appropriate means to mount or remove belt pulleys and clutches (heating) and cover them with a touch guard. Avoid impermissible belt tensions.

The machines are halfkey balanced. The clutch must be halfkey balanced, too. The visible jutting out part of the key must be removed.

If required, provide pipe connections. Designs with shaft end at bottom must be protected with a cover which prevents the ingress of foreign particles into the fan. Free circulation of the cooling air must be ensured. The exhaust air also the exhaust air of other machines next to the drive system must not be taken in immediately.

Electrical connection

All operations must only be carried out by qualified and skilled personnel on the lowvoltage machine at standstill and deenergised and provided with a safe guard to prevent an unintentional restart.This also applies to auxiliary circuits (e. g. brake, encoder, blower).

Check safe isolation from supply!

If the tolerances specified in EN 600341; IEC 34 (VDE 05301) voltage ±5 %, frequency ±2 %, waveform, symmetry are exceeded, more heat will be generated and the electromagnetic compatibility will be affected.

Observe the data on the nameplate, operating notes, and the connection diagram in the terminal box.

The connection must ensure a continuous and safe electrical supply (no loose wire ends); use appropriate cable terminals. The connection to the PE conductor must be safe. The plug-in connectors must be bolt tightly (tostop).

The clearances between blank, live parts and to earth must not fall below 8 mm at $V_{rated} \leq 550$ V, 10 mm at $V_{rated} \leq 725$ V, 14 mm at $V_{rated} \leq 1000$ V.

The terminal box must be free of foreign particles, dirt and moisture. All unused cable entries and the box itself must be sealed against dust and water.

Commissioning and operation

Before commissioning after longer storage periods, measure insulation resistance. In case of values ≤ 1 kΩ per volt of rated voltage, dry winding.

For trial run without output elements, lock the featherkey. Do not deactivate the protective devices, not even in a trial run.

Check the correct operation of the brake before commissioning lowvoltage machines with brakes.

Integrated thermal detectors do not provide full protection for the machine. If necessary, limit the maximum current. Parameterise the controller so that the motor will be switched off with $I > I_{rated}$ after a few seconds of operation, especially at the risk of blocking.

Vibrational severities $v_{eff} \leq 3.5$ mm/s ($P_{rated} \leq 15$ kW) or 4.5 mm/s ($P_{rated} > 15$ kW) are acceptable if the clutch is activated.

If deviations from normal operation occur, e.g. increased temperatures, noises, vibrations, find the cause and, if required, contact the manufacturer. In case of doubt, switch off the lowvoltage machine.

If the machine is exposed to dirt, clean the air paths regularly.

Shaft sealing rings and roller bearings have a limited service life.

Regrease bearings with relubricating devices while the lowvoltage machine is running. Only use the grease recommended by the manufacturer. If the grease drain holes are sealed with a plug, (IP54 drive end; IP23 drive and nondrive end), remove plug before commissioning. Seal bore holes with grease. Replace prelubricated bearings (2Z bearing) after approx. 10,000 h 20,000 h, at the latest however after 3 4 years.

The product-specific safety and application notes given in these instructions must be observed!!

2.3 Residual hazards

Protection of persons

- ► Before working on the controller, check if no voltage is applied to the power terminals.
- ► The operating temperature of the heatsink at the controller is very high. Skin contact with the heatsink causes burns. If required, provide for protective covers.
- ► Before working on the controller, check if no voltage is applied to the power terminals because
  - – depending on the device - the power terminals U, V, W, Rb1, and Rb2 remain live for at least 3 ... 20 minutes after disconnecting the mains.
  - – the power terminals L1, L2, L3; U, V, W, Rb1, and Rb2 remain live when the motor is stopped.

Device protection

- ► Frequent switching on of the mains voltage (e.g. inching mode via mains contactor) may overload or destroy the controller.

Motor protection

- ► Frequent switching on may overheat the connected motor.
- ► Use PTC thermistors or thermostats with PTC characteristics to monitor the motor.
- ► Depending on the controller settings, the connected motor can be overheated by:
  - – For instance, longer DC-braking operations.
  - – Longer operation of self-ventilated motors at low speed.

Protection of the machine/system

- ► Drives can reach dangerous overspeeds (e.g. setting of high output frequencies in connection with motors and machines unsuitable for such conditions):
  - – The controllers do not offer any protection against such operating conditions. Use additional components for this purpose.
- ► Switch **contactors in the motor cable** only if the controller is inhibited.

  When switching contactors in the motor cable while the controller is enabled, you can activate monitoring functions of the controller. If no monitoring function is activated, switching is permissible.
- ► All unused connectors must be closed with protection covers or blanking plugs.

3 Product description

3.1 Device features

Decentralised 8400 protec frequency inverter	Version		
Features	**HighLine**	**StateLine**	**EMS**
Power range	0.75 ... 7.5 kW	0.75 ... 4 kW	0.75 ... 7.5 kW
Mounting type	Wall-mounted device		
Brake management	Control of a mechanical motor holding brake		
24 V supply			
Internal (depending on mains voltage)	✓	✓	✓
24 V buffer voltage possible (for maintaining the control functionality in the case of mains failure)	✓	✓	-
Interfaces			
Digital inputs,	6	6	14
can be configured as outputs	2	2	2 or 4
Analog inputs	1	1	1
or optionally synchronous serial interface (SSI)		-	
Optional: RS485 or/and RS422	-	-	2 x RS485 2 x RS422 1 x RS485 / RS422 each
Remote control, infrared (IrRC)	✓ (from SW V12)	-	✓
Data interface, infrared (IrDA)	-	-	✓
Optional:			
Drive-based safety	Safety option (SO) 10, 20 or 30		-
Operation in generator mode	Internal or external brake resistor		
Control element	Various service switches		
			Rocker switch
Operation			
200 % overload current for 3 s	✓	✓	✓
S ramps for jerk-free acceleration and deceleration	✓	✓	✓
Protection against restart for cyclic mains switching	✓	✓	✓
Technology applications			
Speed actuating drive	✓	✓	✓
Switch-off positioning	✓	✓	✓
Absolute positioning	✓	-	✓
Table positioning	✓	-	✓
EMS-specific communication			
Half wave	-	-	✓
Half wave coded	-	-	✓
Power wave	-	-	✓
DECA BUS	-	-	✓
Inductive energy transmission	-	-	✓
PLC functionality	-	-	✓

3.2 Identification

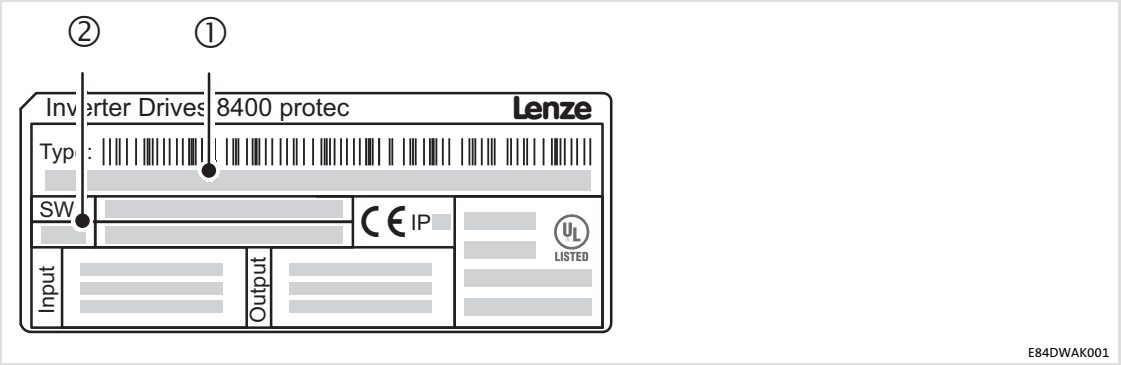

①	Type designation (📖 23)
②	Version

Note

The type designation serves to identify detailed device properties with the following type code. The listing of the type code, features, and device properties does not consider any limitations of possible combinations.

In the HighLine and StateLine versions, certain combinations are not possible:

Possible ...			
either			**or**
Safety option 30	<	>	CAN on board
Analog input	<	>	SSI

Impossible ...			
			with/in
PROFIBUS	<	>	Push-pull
CANopen	<	>	Push-pull
SSI	<	>	StateLine
EtherNet/IP	<	>	Safety option 20 or 30

3.3 Type code

StateLine, HighLine

	E84D	x	x	x	x	xxx	x	x	x	x	x	x	x

Product series
Inverter Drives 8400 protec

Version

H = HighLine

S = Stateline (on request)

Mains connection and 24 V supply

D = Circular connector Molex, 1x mains and 1x 24 V (on request)

H = 1 circular connector Molex (Brad Mini-Change) (on request)

M = 2 hybrid plugs, type Q4/2

P = 1 hybrid plug, type Q4/2

Motor holding brake control
(with connection system for motor)

B = Fast switch, plug type Modular

C = Integrated half-wave brake rectifier, cold brake, plug type Q8/0 (on request)

F = Integrated half-wave brake rectifier, fast switch, plug type Q8/0

Series

C = 24 V internal

Power, e.g.

152 = 15 x 10^2 W = 1.5 kW

Voltage class

4 = 400/500 V, 3/PE AC

Communication (fieldbus)

C = CANopen (on request)

G = EtherNet/IP™

P = PROFIBUS® (on request)

R = PROFINET®

Communication connection system

see ”Possible combinations” table (📖 29)

Extension module

S = None

Drive-based safety

N = None

J = Safety option 10

K = Safety option 20 (on request)

L = Safety option 30

Control element

N = None

C = Service switch with protective function

	E84D	x	x	x	x	xxx	x	x	x	x	x	x	x

Brake resistor

N =	None (on request)
E =	external, plug type Q5/0
F =	external, circular connector Molex (on request)
R =	Internal (on request)

EMS version

	E84D	x	x	x	x	xxx	x	x	x	x	x	x	x

Product series
Inverter Drives 8400 protec EMS

Special communication version for monorail overhead conveyor applications

D = DECA bus
E = Half wave
F = Inductive system
L = Half wave coded
P = Power wave

Connection system for mains and 24-V supply of the brake control in case of inductive systems

M = 2 hybrid plugs, type Q4/2
P = 1 hybrid plug, type Q4/2

Motor holding brake control
(with connection system for motor)

B = Fast switch
(Plug type Modular)
H = Integrated half-wave brake rectifier
(Plug type Han 10E)
K = Integrated half-wave brake rectifier
(Plug type Q8/0)
V = 24 V DC (only inductive system)
Plug type Q8/0

Series

Only for inductive system version:
C = 24 V DC internal
Only for half wave version:
D = Half wave 400 V AC / reference phase L1 // 24 V DC internal
E = Half wave 400 V AC / reference phase L3 // 24 V DC internal
Only for coded half wave version:
F = Half wave 230 V AC / reference phase L1 // 24V DC internal
G = Half wave 230 V AC / reference phase L3 // 24V DC internal
Only for power wave version or DECA bus:
E = Half wave 400 V AC / reference phase L3 // 24 V DC internal

Power, e.g.
152 = 15 x 10^2 W = 1.5 kW

Voltage class
4 = 400/500 V, 3/PE AC

Communication (fieldbus)
C = CANopen

Configuration of input and output range
1 = CANopen and analog input via M12 plug
5 = CANopen and SSI via M12 plug

Extension module
B = Digital I/O, CAN, 2 x RS485
C = Digital I/O, CAN, RS485, RS422
D = Digital I/O, CAN, 2 x RS422

	E84D	x	x	x	x	xxx	x	x	x	x	x	x	x

Drive-based safety

N = None

Control element

N = None

C = Service switch with protective function

R = Rocker switch for EMS (without mains disconnection)

Brake resistor

N = None

E = External

R = Internal

3.4 Overview of standard devices

StateLine, HighLine

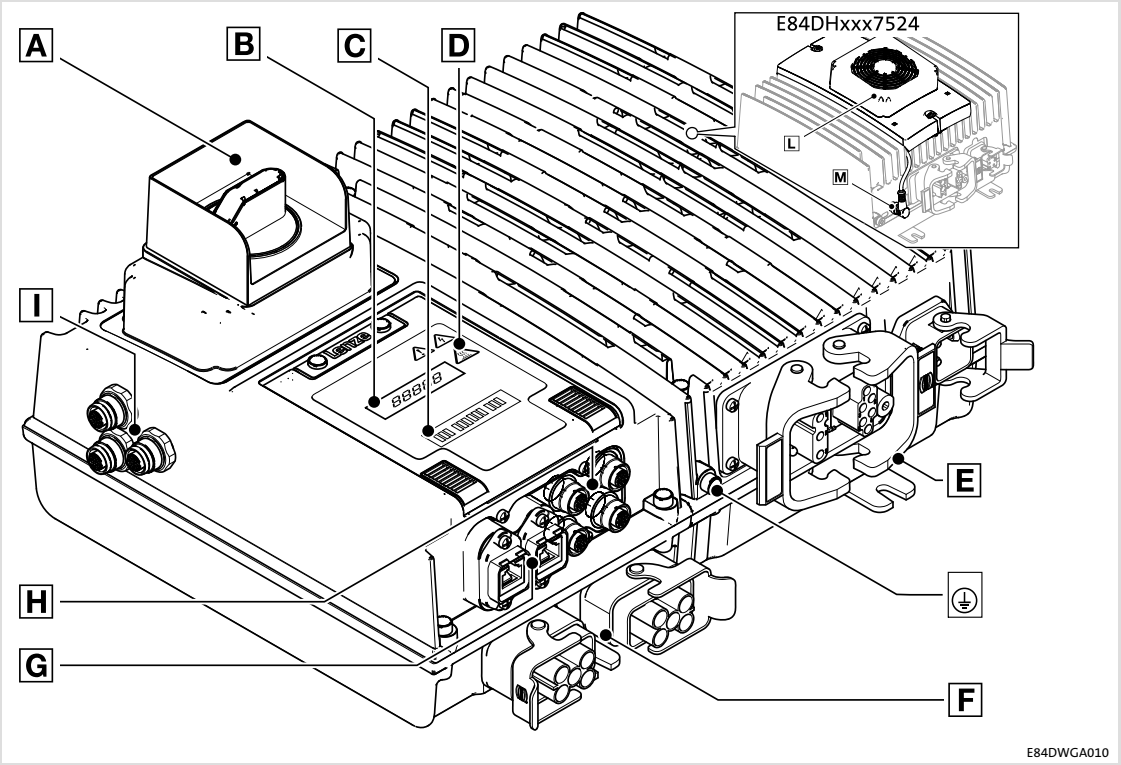

Control elements and overview of connections		
Pos.	**Description/function**	**Page(s)**
A	Control element, various versions, optional	23
B	Display for values and messages, 5 characters	167
C	LED status display	161
D	Warning symbols	See below
E	Motor and brake resistor connections	From 87
F	Connections for mains and 24 V supply voltage	
G	Fieldbus connections	From 64
H	Input and output connections	
I	Connections for safety system and/or CAN on board	
⏚	PE connections, M6 thread	-
L	only E84DHxxx7524: External fan	
M	Operating voltage for the external fan	-

Pos.	Icon	Description
D		**Long discharge time**: All power terminals remain live for up to 3 minutes after mains disconnection!
		High discharge current: Carry out fixed installation and PE connection according to EN 61800-5-1!
		Electrostatic sensitive devices: Before working on the device, the personnel must be free of electrostatic charge!
		Hot surface: Risk of burns! Hot surfaces should not be touched without wearing protective gloves.

EMS version

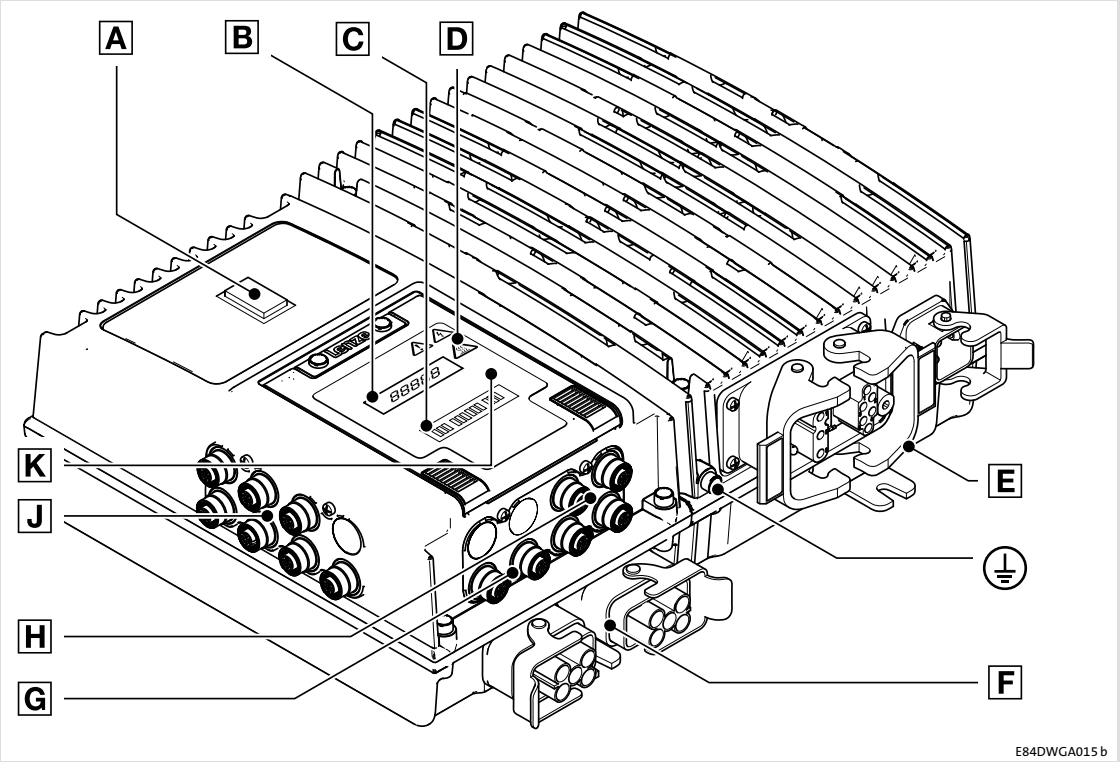

Control elements and connection overview of the EMS version		
Pos.	**Description/function**	**Page(s)**
A	Control element, various versions, optional	25
B	Display for values and messages, 5 characters	167
C	LED status display	161
D	Warning symbols	See below
E	Motor and brake resistor connections	From 87
F	Mains connections and EMS-specific communication	
G	Fieldbus connections	From 64
H	Input and output connections	
J	EMS extension connection	23
K	Infrared receiver/transmitter	167
⏚	PE connections, M6 thread	-

Pos.	Icon	Description
D		**Long discharge time**: All power terminals remain live for up to 3 minutes after mains disconnection!
		High discharge current: Carry out fixed installation and PE connection according to EN 61800-5-1!
		Electrostatic sensitive devices: Before working on the device, the personnel must be free of electrostatic charge!
		Hot surface: Risk of burns! Hot surfaces should not be touched without wearing protective gloves.

3.5 Communication

The available combinations of communication and connection system can be seen from the table.

Type code characteristics		Connection system version				
Communication (fieldbus)	Input / output area configuration	Fieldbus		SSI 3)	Analog input	CAN on board
		Push-pull	M12	M12	M12	M12
CANopen 1) 4)						
C	1 4)	-	☑	-	☑	-
	5 4)	-	☑	☑	-	-
PROFIBUS 4)						
P	1 4)	-	☑	-	☑	-
	3 4)	-	☑	-	☑	☑ 2)
	5 4)	-	☑	☑	-	-
	7 4)	-	☑	☑	-	☑ 2)
PROFINET / EtherNet/IP 1)						
R / G	1 4)	-	☑	-	☑	-
	2	☑	-	-	☑	-
	3 4)	-	☑	-	☑	☑ 2)
	4 4)	☑	-	-	☑	☑ 2)
	5	-	☑	☑	-	-
	6	☑	-	☑	-	-
	7 4)	-	☑	☑	-	☑ 2)
	8 4)	☑	-	☑	-	☑ 2)

☑ designed
1) cannot be combined with safety options 20 and 30
2) cannot be combined with safety option 30
3) not in StateLine version
4) on request
\- impossible

3.5.1 CAN port

Detailed information on CAN can be found in the software manual.

CAN on board

”CAN on board” is only suited for short point-to-point connections between two controllers, e.g. for synchronisation. Pay attention to notes on EMC-compliant wiring and short cable lengths as there is no isolation towards the control electronics of the controller.

Node address and baud rate must be parameterised using the »Engineer«.

CANopen

CANopen is executed as isolated fieldbus and suited for multiple-node networks.

In case of fieldbuses, node address and baud rate can be set using the DIP switch under the service hatch or parameterised using the »Engineer«.

3.5.2 Infrared remote control receiver

For remote control, the devices are equipped with an infrared receiver (IrRC) (supported from SW version 12 onwards).

The actions enabled by the infrared remote control (LDEZIRRC) are freely programmable. For more information see the software manual and the online help for the LS_IRInterface system block.

Note!

A trouble-free operation of the optical interface requires:

► Clear line of sight between transmitter and receiver
- – Maximum distance IrRC: ~ 5 m
- – Maximum distance IrDA: ~ 1 m
- – Angle of incidence: ~ 30 °
- – Avoid direct solar radiation
- – Environment without interfering transmitter (e.g. from adjacent stations)

► Clean and scratch-free service hatch

3.5.3 Extensions in EMS version

For EMS device versions, additional interfaces are implemented for control :

► Additional digital inputs and outputs

► Infrared data interface (IrDA)

► RS485 and/or RS422 serial interface

The type designation indicates which extensions are implemented in a device (📖 25).

Overview of EMS extensions

Indicator in the type code	Connection			
	Digital I/O	RS485	RS422	CANopen master PLC
	X45, X46, X47, X48	X81, X82		X34
	M12, 5-pole, A-coded	M12, 8-pole, A-coded		M12, 5-pole, A-coded
B	6 x DI 2 x DI/O (X46 configurable)	2 x	-	☑
C		1 x	1 x	☑
D		-	2 x	☑

☑ designed
- impossible

3.5.4 Infrared interface

The EMS versions come with an implemented infrared interface for data transfer (IrDA).

The actions enabled via the interface or the reading of parameter data (codes) are freely programmable in the PLC program.

Note!

A trouble-free operation of the optical interface requires:

- ► Clear line of sight between transmitter and receiver
  - – Maximum distance IrRC: ~ 5 m
  - – Maximum distance IrDA: ~ 1 m
  - – Angle of incidence: ~ 30 °
  - – Avoid direct solar radiation
  - – Environment without interfering transmitter (e.g. from adjacent stations)
- ► Clean and scratch-free service hatch

3.6 Concepts for the mains connection

8400 protec controllers support the implementation of various concepts for the mains connection. Here, a distinction is drawn between wiring using a:

- Standard cable - commercially available cable
- Hybrid cable - special cable for mains voltage and buffer/control voltage, including shielding if required

The following must be observed when selecting the wiring:

- Permissible back-up fuse: max. 32 A
- Permissible current for plug contacts 24 V supply: max. 10 A
- Select the cable cross-sections in compliance with applicable standards and directives.
  – Mains/PE: max. 6 mm^2
  – 24 V supply: max. 2.5 mm^2

3.6.1 Concepts for the connection of individual axes

The following versions are possible according to device version (see type code for mains connection system):

Standard cable ①

The mains voltage is connected to the controller by means of a standard cable (plug X10).

The 24 V supply of the controller is generated inside the device (mains-operated supply). After the mains voltage has been switched off, all device functions including the control electronics are deactivated. The switch function of Ethernet fieldbuses is also inactive.

Hybrid cable with external 24 V buffer voltage ②

The mains voltage and an external 24 V buffer voltage are fed using a hybrid cable (plug X10). Depending on the state of the external 24 V supply, it is possible for the control electronics to remain active even if the mains is switched off.

Standard cable with external 24 V buffer voltage ③

Since the connector housings only allow for one cable access per Q4/2 connector, the E84Dx**M**... device version (loop-through technique) can be used to implement this concept for connection.

Here, the mains voltage is connected to the controller by means of a standard cable (plug X10). The external 24 V buffer voltage is connected by means of a standard cable (plug X11). Depending on the state of the external 24 V supply, it is possible for the control electronics to remain active even if the mains is switched off.

Note!
This concept for connection implies that the mains voltage at plug X10 is also applied at plug X11 at the same time.

Wiring principle

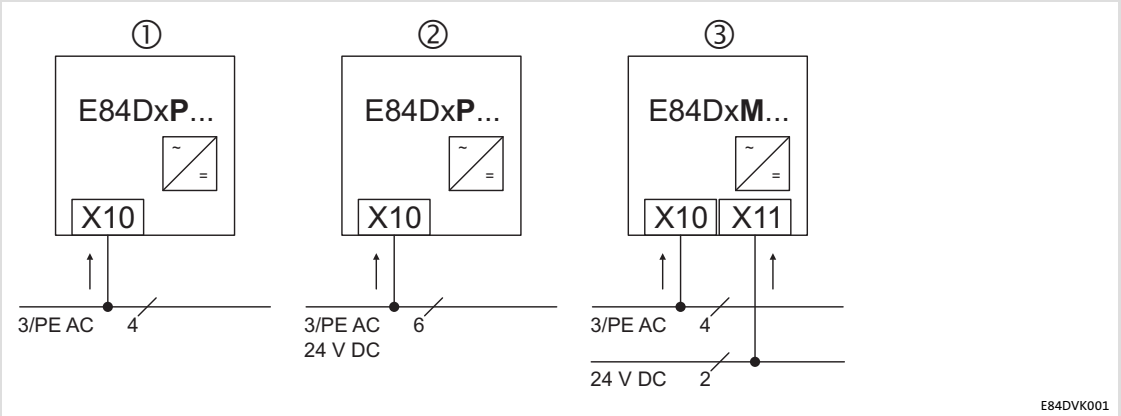

①	8400 protec in version E84Dx**P**...
X10	Mains connection 3/PE AC with standard cable
②	8400 protec in version E84Dx**P**...
X10	Mains connection 3/PE AC with 24 V DC buffer voltage and hybrid cable
③	8400 protec in version E84Dx**M**...
X10	Mains connection 3/PE AC with standard cable
X11	24 V DC buffer voltage with standard cable

3.6.2 Concepts for the connection of the power bus

Spacious plants are often organised in lines. A clearly structured cable routing leads to a typical line topology. Two connection types are used:

- ► Loop-through technique from device to device
  - – Here, the mains voltage and the 24 V buffer voltage are applied at X10 and X11 at the same time.
- ► Branch of power distributors

Depending on the type of cables and the 24 V supply, the following implementations are possible.

Possible loop-through arrangements:

Standard cable ①

The mains voltage is distributed among the devices by means of a standard cable (plugs X10 and X11). The 24 V supply of the controller is generated inside the device (mains-operated supply). After the mains voltage has been switched off, all device functions including the control electronics are deactivated. The switch function of Ethernet fieldbuses is also inactive.

Hybrid cable with external 24 V buffer voltage ②

The mains voltage and an external 24 V buffer voltage (self-contained) are distributed among the devices using a cable (plugs X10 and X11). Depending on the state of the external 24 V supply, it is possible for the control electronics to remain active even if the mains is switched off.

Arrangements including power distributors:

Standard cable including power distributors③

The mains voltage is carried in a cable and distributed to the device by power distributors (plug X10). The 24 V supply of the controller is generated inside the device (mains-operated supply). After the mains voltage has been switched off, all device functions including the control electronics are deactivated. The switch function of Ethernet fieldbuses is also inactive.

Hybrid cable with power distributors and external 24 V buffer voltage ④

The mains voltage and the 24 V buffer voltage are carried in a cable and distributed to the device by power distributors (plug X10). Depending on the state of the external 24 V supply, it is possible for the control electronics to remain active even if the mains is switched off.

Standard cable with power distributors and external 24 V buffer voltage ⑤

Isolated cable routing for mains voltage and 24 V buffer voltage.

Here, the mains voltage is connected to the controller by means of a standard cable (plug X10). The external 24 V buffer voltage (self-contained) is connected by means of a standard cable (plug X11). Depending on the state of the external 24 V supply, it is possible for the control electronics to remain active even if the mains is switched off.

Wiring principle

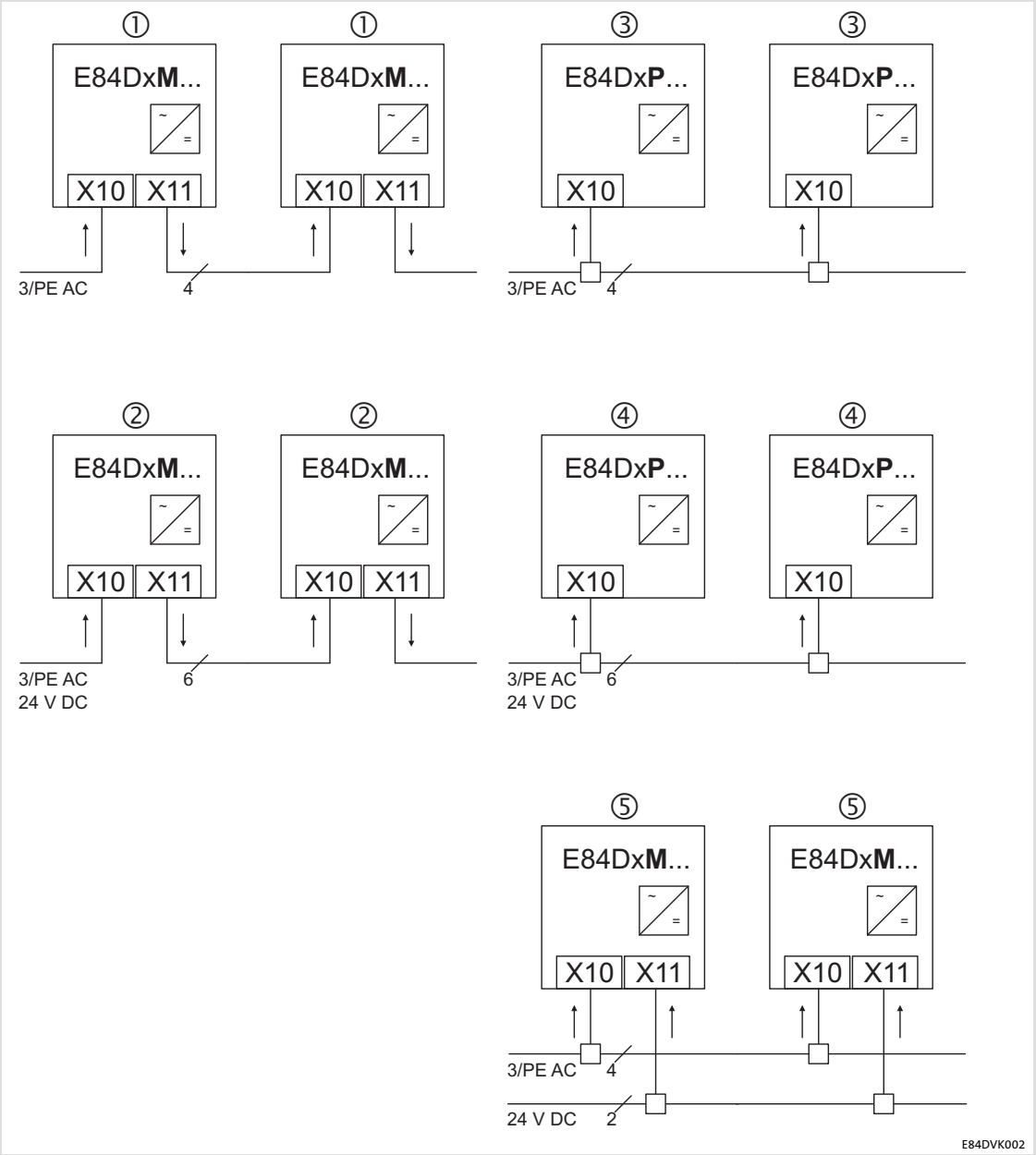

①	Loop-through technique with 8400 protec in version E84Dx**M**...
X10, X11	Mains connection 3/PE AC with standard cable
②	Loop-through technique with 8400 protec in version E84Dx**M**...
X10, X11	Mains connection 3/PE AC with 24 V DC supply voltage and hybrid cable
③	Power distributor with 8400 protec in version E84Dx**P**...
X10	Mains connection 3/PE AC with standard cable
④	Power distributor with 8400 protec in version E84Dx**P**...
X10	Mains connection 3/PE AC with 24 V DC supply voltage and hybrid cable
⑤	Power distributor with 8400 protec in version E84Dx**M**...
X10	Mains connection 3/PE AC with standard cable
X11	24 V DC buffer voltage with standard cable

3.7 EMS mains connection concepts

The mains connection concepts can also be realised with 8400 protec EMS, e.g.

- Loop-through technique from device to device for multi-axis applications

Moreover, 8400 protec EMS controllers support the following (depending on the device version):

- Contact conductor connection for mains, control bar and message bar (half wave and coded half wave)
- Control signals via mains voltage (power wave)
- Control signals via rail bus
- Inductive transmission of energy and signals

For establishing a drive system, more adjusted components are required.

3.7.1 Half wave (coded)

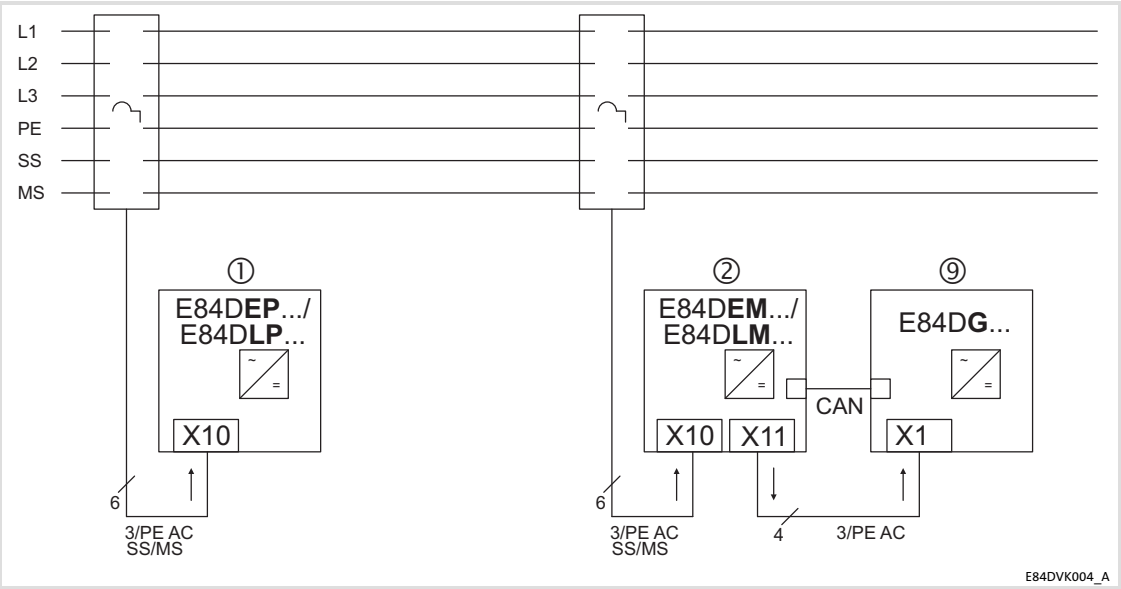

L1 ... L3, PE	Sliding bar conductors for mains and PE conductor
SS	Control bar SS1, SS2
ms	Message bar MS1
①	8400 protec EMS controller for single-axis drive
②	8400 protec EMS controller for multi-axis drive
X10	Mains
X11	Mains loop-through technique
CAN	CANopen communication
⑨	Controller, e.g. 8400 motec, as auxiliary drive
X1	Mains (with accessory plug-in module E84DZEVB...: X10)

3.7.2 Power wave

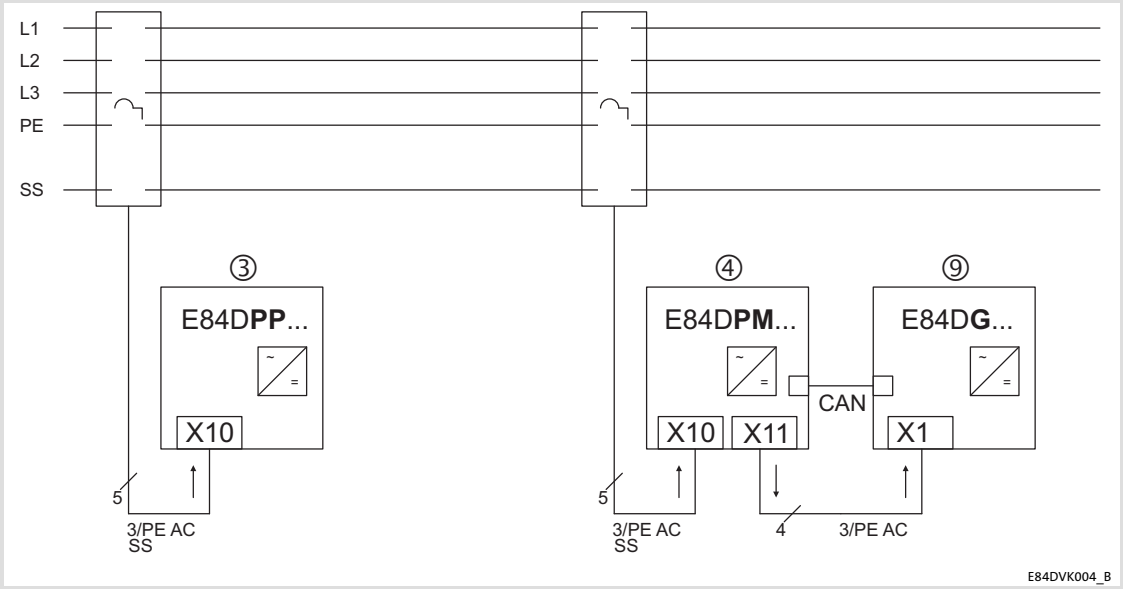

L1 ... L3, PE	Sliding bar conductors for mains and PE conductor
SS	Control bar Data±, SS1
③	8400 protec EMS controller for single-axis drive
④	8400 protec EMS controller for multi-axis drive
X10	Mains
X11	Mains loop-through technique
CAN	Communication of CANopen master PLC
⑨	Controller, e.g. 8400 motec, as auxiliary drive
X1	Mains (with accessory plug-in module E84DZEVB...: X10)

3.7.3 DECA bus

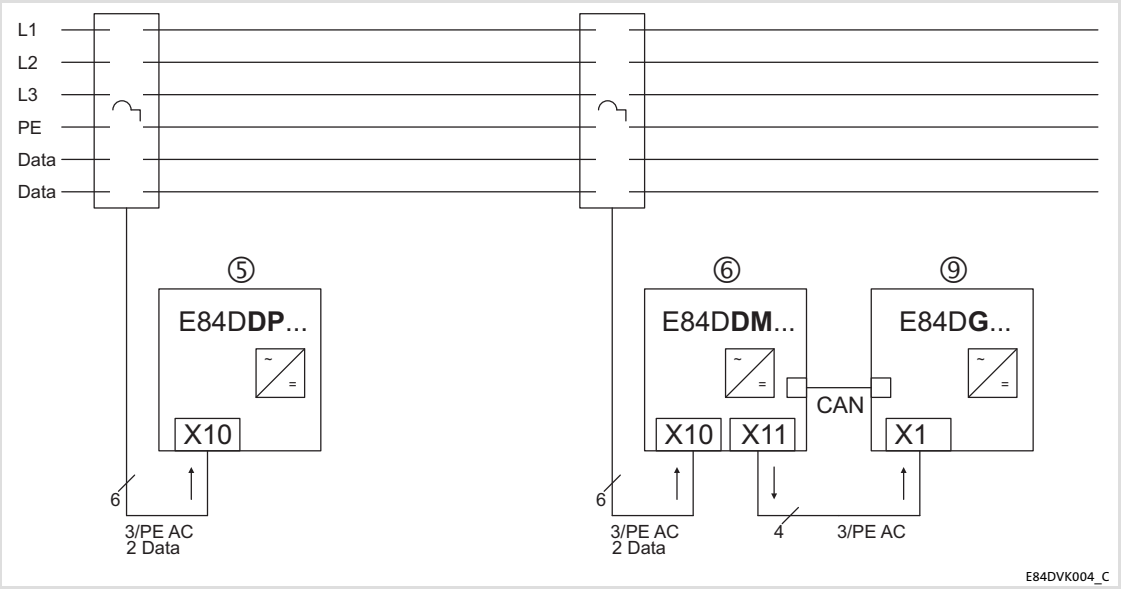

L1 ... L3, PE	Sliding bar conductors for mains and PE conductor
Data	Signal rails Data±, SS1
⑤	8400 protec EMS controller for single-axis drive
⑥	8400 protec EMS controller for multi-axis drive
X10	Mains
X11	Mains loop-through technique
CAN	Communication of CANopen master PLC
⑨	Controller, e.g. 8400 motec, as auxiliary drive
X1	Mains (with accessory plug-in module E84DZEVB...: X10)

3.7.4 Inductive

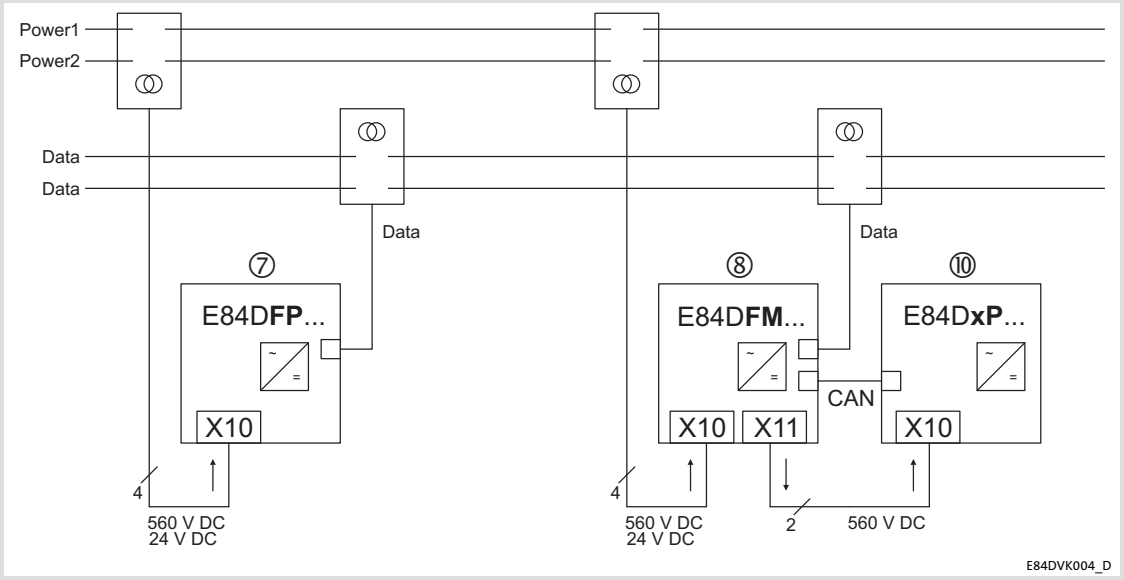

Power1/2	Inductive energy transmission (24 V DC for controlling a motor holding brake)
Data	Inductive data transfer
⑦	8400 protec EMS controller for single-axis drive
⑧	8400 protec EMS controller for multi-axis drive
X10	Mains
X11	Mains loop-through technique
CAN	Communication of CANopen master PLC
⑩	Controller, e.g. 8400 protec, as auxiliary drive
X10	DC mains voltage

4 Technical data

4.1 General data and operating conditions

General data

Conformity and approval			
Conformity			
CE	2006/42/EC	Machinery Directive (only relevant for safety components)	
	2014/35/EU	Low-Voltage Directive	
	2014/30/EU	EMC Directive	
	2011/65/EU	RoHS Directive	
	2009/125/EC	Ecodesign Directive	
UKCA	S.I. 2008/1597	The Supply of Machinery (Safety) Regulations 2008 (only relevant for safety components)	
	S.I. 2016/1101	The Electrical Equipment (Safety) Regulations 2016	
	S.I. 2016/1091	The Electromagnetic Compatibility Regulations 2016	
	S.I. 2012/3032	The Restriction of the Use of Certain Hazardous Substances in Electrical and Electronic Equipment Regulations 2012	
	S.I. 2021/745	The Ecodesign for Energy-Related Products and Energy Information Regulations 2021	
EAC	TP TC 004/2011 (TR CU 004/2011)	On safety of low voltage equipment	Eurasian Conformity TR CU: Technical Regulation of Customs Union
	TP TC 020/2011 (TR CU 020/2011)	Electromagnetic compatibility of technical means	Eurasian Conformity TR CU: Technical Regulation of Customs Union
China RoHS	SJ/T 11364-2014	Marking for the restriction of the use of hazardous substances in electrical and electronic product	
Approval			
$_{C}UL_{US}$	UL 508C CSA 22.2 No. 274-13	Power Conversion Equipment, File No. 132659	
	-	No UL approval for control element W	

Protection of persons and equipment			
Enclosure	EN 60529	IP65	All unused connectors must be closed with protection covers or blanking plugs.
		Deviating enclosure by options:	
		IP64 with control element C	
		IP54 with control element W	
		IP55 with external fan for 7.5 kW devices	
	NEMA	Type 4X, indoor only	
(Earth) leakage current	EN 61800-5-1	> 3.5 mA AC, > 10 mA DC	Observe the regulations and safety instructions!
Total fault current		< 100 mA Earth-leakage circuit breakers of type B can be used.	
additional equipotential bonding		M6 thread outside at the housing for connecting a 16mm^2 PE cable	
Protective insulation of control circuits	EN 61800-5-1	Safe isolation from mains by double (reinforced) insulation	
Insulation resistance	EN 61800-5-1	< 2000 m site altitude: Overvoltage category III	
		> 2000 m site altitude: Overvoltage category II	
Short-circuit strength	EN 61800-5-1	Motor connection: Limited, controller is inhibited, error acknowledgement required	
		Phase/phase not earth-fault-proof	Max. short-circuit current to be expected: 10 kA
		Motor holding brake connection: no	
		Brake resistor connection: no	
		PTC connection: not earth-fault-proof	
		Control terminals: full	
SCCR		CE: 5 kA	
Protective measures for		● Short circuit on the motor side at switchon and during operation ● Earth fault at switchon ● Motor stalling ● Motor overtemperature – Input for PTC or thermal contact – I^2t monitoring	
Cyclic mains switching		● 3 switching/minute ● maximally 20 switching/hour A circuit that can be reset automatically protects the device against destruction.	
Installation	EN 60204-1	Cable protection on the supply side is max. 32 A with ● cable cross-section (L1, L2, L3): 6 mm^2 ● laying system B2 max. short-circuit current: < 10 kA	

Operating conditions

Ambient conditions		
Climatic		
Storage	EN 60721-3-1	1K3 (-25 ... +60 °C)
Transport	EN 60721-3-2	2K3 (-25 ... +75 °C)
Operation	EN 60721-3-3	3K3 (-25 ... +55 °C) ”K” or ”L” safety system included: -25 ... +45 °C
		Operation at 2/4 kHz: > +45 °C: Reduce the rated output current by 2.5 %/°C. Operation at 8/16 kHz: > +40 °C: Reduce the rated output current by 2.5 %/°C.
Site altitude		0 ... 4000 m amsl Above 1000 ... 4000 m amsl: Reduce the rated output current by 5 %/ 1000 m.
Pollution	EN 61800-5-1	Degree of pollution 2
Mechanical		
Vibration resistance (9.81 m/s² = 1 g)		
Transport	EN 60721-3-2	2M2
	EN 61800-2	2 ... 9 Hz: Amplitude 3.5 mm
		10 ... 200 Hz: Acceleration resistant up to 10 m/s²
		200 ... 500 Hz: Acceleration resistant up to 15 m/s²
Operation	Germanischer Lloyd	General conditions: Acceleration resistant up to 2 g
	EN 60721-3-3	3M4
	EN 61800-5-1	10 ... 57 Hz: Amplitude 0.075 mm
		57 ... 150 Hz: Acceleration resistant up to 1 g

Supply conditions		
Mains connection		
Power system		
TT, TN (with earthed neutral)		Operation is permitted without any restrictions.
IT		Only permitted with devices of voltage class ”E” (see type code).
Motor connection		
Motors	EN 60034	Only use motors suitable for inverter operation. Insulation resistance: min. û ≥1.5 kV, min. du/dt ≥5 kV/µs
Length of the motor cable		< 20 m (Lenze system cable, shielded)

Mounting conditions		
Mounting place		Wall Ensure convection cooling in the niches.)
Mounting position		
Standard mounting		Display to the front Vertically suspended, -30 ... +30 °
		In case of greater angles of tilt: Operation at 2/4 kHz: > +40 °C: Reduce the rated output current by 2.5 %/°C. Operation at 8/16 kHz: > +35 °C: Reduce the rated output current by 2.5 %/°C.
Free space		📖 72

Requirements on the motor cable			
Capacitance per unit length			
≤ 1.5 mm²/AWG 16		$C_{Core/core}/C_{Core/shield} \leq 75/150$ pF/m	
≥ 2.5 mm²/AWG 12		$C_{core/core}/C_{Core/shield} \leq 100/\leq 150$ pF/m	
Electric strength			
	VDE 0250-1	$U_0/U_{=}$ 0.6/1.0 kV	(U_0 = r.m.s. value external - conductor/PE, U = r.m.s. value - external conductor/external conductor)
	UL	U ≥ 600 V	(U = r.m.s. value external conductor/external conductor)

EMC		
Noise emission		
Cable-guided	EN 61800-3	Up to 20 m shielded motor cable (Lenze system cable): category C2
Radiation		Category C2
Noise immunity (according to requirements of EN 61800-3)		
Electrostatic discharge (ESD)	EN 61000-4-2	8 kV with air discharge, 4 kV with contact discharge against housing
Radio frequency		
Cable-guided	EN 61000-4-6	150 kHz ... 80 MHz, 10 V/m 80 % AM (1kHz)
Interference (housing)	EN 61000-4-3	80 MHz ... 1000 MHz, 10 V/m 80 % AM (1kHz)
Burst		
Power terminals and interfaces	EN 61000-4-4	2 kV/5 kHz
Signal interfaces	EN 61000-4-4	1 kV/5 kHz
Control terminals	EN 61000-4-4	2 kV/5 kHz
Surge		
Power terminals	EN 61000-4-5	1.2/50 µs, 1 kV phase/phase, 2 kV phase/PE
Control terminals	EN 61000-4-5	1.2/50 µs, 1 kV
Operation on public supply systems	EN 61000-3-2 EN 61000-3-12	The devices are intended for use in an industrial environment. When being used on public network, additional measures must be taken to limit the expected radio interference. The compliance with the requirements for the machine/plant is the responsibility of the manufacturer of the machine or system!
	EN 61000-3-2	< 0.5 kW: with mains choke
		0.5 ... 1 kW: with active filter
		> 1 kW at mains current ≤ 16 A: No limit values for harmonic currents
	EN 61000-3-12	Mains current > 16 A: further measures are required for compliance with the standard

Open and closed loop control		
Open and closed loop control processes		
	VFCplus: ● V loop (linear or square-law) ● V/f closed loop SLVC: ● Sensorless vector control (torque/speed)	
Only for HighLine device version	SC: ● Servo control (torque/speed)	
from SW version 12	VFCplus eco: ● Energy-efficient V/f characteristic SL PSM: ● Sensorless synchronous control (torque/speed)	
Switching frequency		
	2 kHz, 4 kHz, 8 kHz, 16 kHz, Optionally noise optimised or power-loss optimised	
Torque behaviour		
Setting range	1 : 10	In a setting range of 3 ... 50 Hz
Sensorless vector control (speed)		
Minimum output frequency	0.5 Hz (0 ... M_{rated})	
Setting range	1 : 10	Based on 50 Hz and M_{rated}
Accuracy	±0.5 %	In a setting range of 3 ... 50 Hz
Smooth running	±0.1 Hz	
Output frequency		
Range	-599 Hz ... +599 Hz	
Absolute resolution	0.2 Hz	
Standardised resolution	Parameter data: 0.01 %, process data: 0.006 % (= 2^{14})	
Digital setpoint selection		
Accuracy	±0.01 %	
Analog setpoint selection		
Accuracy	±1 %	Based on the final value

EMS version

Half-wave system		
E84DE..., E84DL...		
Control bar		
Z system		No
Number		2
Signal level		Full wave
		Positive half wave
		Negative half wave
		Coded half wave
Reference voltage or switched voltage		L3 L1 possible with different hardware configuration
Rated voltage		400-480 V AC, 50-60 Hz
		Coded half wave: 230 V AC, 50-60 Hz
Switching threshold		50 Hz: 270 V AC (243 ... 297 V AC) 60 Hz: 330 V AC (297 ... 363 V AC)
Power input		1.5 W (400 V AC) for 1 x half wave
Signalling bar		
Number		1
Signal level		Full wave
		Positive half wave
		Negative half wave
Reference voltage or switched voltage		L3 L1 possible with different hardware configuration
Short circuit protection		PTC protection (500 Ω connected in series)
Reference voltage		400 ... 480 V
Switching current		max. 28 mA AC

4.2 Rated data

4.2.1 Overview

Basis of the data			
Mains	**Voltage** U_{Lrated} [V]	**Voltage range** U_{Lrated} [V]	**Frequency range** f [Hz]
3/PE AC	400	320 - 0 % ... 440 + 0 %	45 - 0 % ... 65 + 0 %
3/PE AC	500	400 - 0 % ... 550 + 0 %	45 - 0 % ... 65 + 0 %

Output switching frequency f = 4 kHz

Input data

	Voltage [V]	**Frequency** [Hz]	**Rated current [A]** up to +45 °C ①	up to +55 °C ①	**Number of phases**
E84Dxxxx7514	400/500	50/60	4.1/3.2	3.0/2.4	3
E84Dxxxx1524	400/500	50/60	5.5/4.4	3.5/3.1	3
E84Dxxxx3024	400/500	50/60	9.7/7.9	7.3/6.0	3
E84Dxxxx4024	400/500	50/60	12.9/11.0	9.5/8.1	3
E84DHxxx7524	400/500	50/60	20.8/16.6	15.6/12.5	3

① Ambient temperature during operation

Rated data of the 24-V buffer voltage (preserves the control functionality in the event of a mains failure):

Typ	**Supply voltage for control electronics of the controller (safely separated power supply unit SELV/PELV)** Voltage range U_{DC} [V DC]	Current consumption at + 24 V DC [A] Min. 1)	Max. 2)
E84Dxxxx7514	+ 24 (+19.2 - 0 % ... +28.8 + 0 %)	0.2 ... 0.6	2
E84Dxxxx1524			
E84Dxxxx3024			
E84Dxxxx4024			
E84DHxxx7524			

1) according to optional equipment, digital inputs and outputs are not wired
2) digital inputs and outputs are completely wired

Note!

The maximum total current of the 24 V voltage supply for external actuators and encoders is 1 A, e.g. ports

- ► Digital inputs/outputs at X4x,
- ► Analog input at X50 or SSI at X80, and
- ► Serial interfaces RS485/RS422 at X81/X82.

Output data

	Voltage	Frequency	Rated current [A]		Number of phases
	[V]	[Hz]	up to +45 °C ①	up to +55 °C ①	
E84Dxxxx7514	0 ... 400/500	0 ... 1000	2.4/1.9	1.8/1.4	3
E84Dxxxx1524	0 ... 400/500	0 ... 1000	3.9/3.1	2.9/2.3	3
E84Dxxxx3024	0 ... 400/500	0 ... 1000	7.3/5.8	5.5/4.4	3
E84Dxxxx4024	0 ... 400/500	0 ... 1000	9.5/7.6	7.1/5.7	3
E84DHxxx7524	0 ... 400/500	0 ... 1000	16.0/12.8	12.0/9.6	3

① Ambient temperature during operation

Power losses

	Power loss P_V [W]	
Type	when operating with rated output current I_{arated}	when controller is inhibited
E84Dxxxx7514	66	27
E84Dxxxx1524	84	
E84Dxxxx3024	127	
E84Dxxxx4024	155	
E84DHxxx7524	232	

4.2.2 Operation at rated mains voltage 400 V

Basis of the data			
Mains	**Voltage** U_{Lrated} [V]	**Voltage range** U_{Lrated} [V]	**Frequency range** f [Hz]
3/PE AC	400	320 - 0 % ... 440 + 0 %	45 - 0 % ... 65 + 0 %

Type	**Mains current at I_{arated}** I_{Lrated} [A]	**Output power** U, V, W S_{arated} [kVA]	**Motor power** 4 pol. ASM P_{arated} [kW]
E84Dxxxx7514	4.1	1.5	0.75
E84Dxxxx1524	5.5	2.4	1.5
E84Dxxxx3024	9.7	4.6	3.0
E84Dxxxx4024	12.9	5.9	4.0
E84DHxxx7524	20.8	10.0	7.5

	Output currents [A] at switching frequency							
	2 kHz		4 kHz		8 kHz		16 kHz	
Type	$I_{arated2}$	I_{aM2}	$I_{arated4}$	I_{aM4}	$I_{arated8}$	I_{aM8}	$I_{arated16}$	I_{aM16}
E84Dxxxx7514	2.4	4.8	2.4	4.8	2.4	4.8	1.6	3.2
E84Dxxxx1524	3.9	7.8	3.9	7.8	3.9	7.8	2.3	5.2
E84Dxxxx3024	7.3	14.6	7.3	14.6	7.3	14.6	4.9	9.7
E84Dxxxx4024	9.5	19.0	9.5	19.0	9.5	19.0	6.3	12.7
E84DHxxx7524	16.0	32.0	16.0	32.0	16.0	30.0	10.7	21.3

I_{aNx}	Rated value of continuous output current
I_{aMx}	Maximum output current (overload current) ● Periodic load change of 3 s with I_{aMx} and recovery time of 12 s according to the tables under chapter 📖 4.4 ● Can be obtained in the setting ”x kHz fixed/...” in C00018
Switching frequency	If the maximum heatsink temperature is reached, the switching frequency is reduced to 4 kHz. In the setting ”x kHz var./...” in C00018 the switching frequency is reduced depending on the output current. Depending on the switching frequency and e.g. the ambient temperature, it may be required to reduce the output current (chapter 4.1, operating conditions).

Rated data for internal brake chopper

Switching threshold V_{BRmax}: 725 V, adjustable

Type	R_{Bmin} [Ω]	I_{BRmax} [A]	P_{BRmax} [kW]	I_{BRd} [A]	P_{Bd} [kW]	t_Z [s]	t_{on} [s]	t_{fp} [s]
Internal brake resistor								
E84Dxxx7514 E84Dxxx1524	220	3.3	2.4	0.5	0.05 1)	-	-	-
E84Dxxx3024 E84Dxxx4024 E84Dxxx7524	-	-	-	-	-	-	-	-
External brake resistor								
E84Dxxx7514	150	4.8	3.5	1.4	0.9	300	60	-
E84Dxxx1524	150	4.8	3.5	2.9	2.0	300	60	-
E84Dxxx3024	47	15.4	11.2	5.7	3.9	300	60	-
E84Dxxx4024	47	15.4	11.2	7.5	5.2	300	60	-
E84Dxxx7524	47	15.4	11.2	14.1	9.8	300	60	-

R_{Bmin}	Minimum brake resistance, nominal value ±10 %
I_{BRmax}	Peak current
P_{BRmax}	Peak braking power
I_{BRd}	Continuous current RMS - important for the dimensioning of the cables
P_{Bd}	Continuous braking power
t_Z	Cycle time, periodic load change with running time and recovery time
t_{on}	Running time
t_Z - t_{on}	Recovery time
t_{fp}	Maximum running time without initial load and compliance with the recovery time
1)	**Max. heat Q_B: 3 kWs** Max. power loss in the internal brake resistor P_{Bdav}: see table

	f_{ch} [kHz]	I_a [A]	P_{Bdav} [W] T_{amb} 20 °C	30 °C	40 °C	45 °C
E84Dxxx7514	4	2.4	50	47	-	27
		1.4	50	50	-	37
	8	2.4	48	34	21	-
		1.4	50	49	35	-
E84Dxxx1524	4	3.9	42	28	-	8
		2.34	50	47	-	27
	8	3.9	22	9	0	-
		2.34	48	34	21	-

f_{ch}	Output switching frequency
I_a	Motor current
P_{Bdav}	Permissible power loss in the **internal** brake resistor, averaged over 60 s and dependent on T_{amb} (Linear interpolation/extrapolation via T_{amb} is permissible. Here, the application must limit the power loss in the brake resistor to $P_{Bdav} \leq P_{Bd}$.)
T_{amb}	Ambient temperature

Fuses and cable cross-sections

Operation without external mains choke/mains filter								
Type	Installation according to EN 60204-1 [1]					Installation according to UL [2]		FI [3]
	①	②	L1, L2, L3 - Laying system			③	L1, L2, L3	
			B2	C	F			
	[A]	[A]	[mm²]	[mm²]	[mm²]	[A]	[AWG]	[mA]
E84Dxxxx7514	32	32	6	-	-	30	8	≥ 300
E84Dxxxx1524	32	32	6	-	-	30	8	≥ 300
E84Dxxxx3024	32	32	6	-	-	30	8	≥ 300
E84Dxxxx4024	32	32	6	-	-	30	8	≥ 300
E84DHxxx7524	32	32	6	-	-	30	8	≥ 300

1) These values are recommendations only. Other dimensioning values/laying systems are possible (e.g. according to VDE 0298-4). The cable cross-sections apply under the following conditions: Use of PVC-insulated copper cables, conductor temperature < 70 °C, ambient temperature < 45°C, no bundling of cables or cores, three loaded cores.

2) Use UL-approved cables, fuses and fuse holders only.
UL fuse: voltage ≥ 500 V, tripping characteristic for example ”H”, ”K5” or ”CC”. The cable cross-sections apply under the following conditions: conductor temperature < 75 °C, ambient temperature < 45°C.

3) Universal-current sensitive earth-leakage circuit breaker, short-time delay
If cables are longer than 50 m, the protective circuit-breaker may respond, depending on the cable type and switching frequency.

① Circuit breaker

② Fuse of gG/gL utilisation category or semiconductor fuses of gRL utilisation category

③ Fuse

Observe national and regional regulations

4.2.3 Operation at a rated mains voltage of 500 V

Basis of the data			
Mains	**Voltage** U_{Lrated} [V]	**Voltage range** U_{Lrated} [V]	**Frequency range** f [Hz]
3/PE AC	500	400 - 0 % ... 550 + 0 %	45 - 0 % ... 65 + 0 %

Type	**Mains current at I_{arated}** I_{Lrated} [A]	**Output power** U, V, W S_{arated} [kVA]	**Motor power** 4 pol. ASM P_{arated} [kW]
E84Dxxxx7514	3.2	1.5	0.75
E84Dxxxx1524	4.4	2.4	1.5
E84Dxxxx3024	7.9	4.6	3.0
E84Dxxxx4024	11.0	5.9	4.0
E84DHxxx7524	16.6	10.0	7.5

	Output currents [A] at switching frequency							
	2 kHz		4 kHz		8 kHz		16 kHz	
Type	$I_{arated2}$	I_{aM2}	$I_{arated4}$	I_{aM4}	$I_{arated8}$	I_{aM8}	$I_{arated16}$	I_{aM16}
E84Dxxx7514	1.9	3.8	1.9	3.8	1.9	3.8	1.3	2.6
E84Dxxx1524	3.1	6.2	3.1	6.2	3.1	6.2	2.1	4.2
E84Dxxx3024	5.8	11.6	5.8	11.6	5.8	11.6	3.9	7.8
E84Dxxx4024	7.6	15.2	7.6	15.2	7.6	15.2	5.1	10.1
E84DHxx7524	12.8	25.6	12.8	25.6	12.8	24.0	8.5	17.1

I_{aNx} Rated value of continuous output current

I_{aMx} Maximum output current (overload current)
- Periodic load change of 3 s with I_{aMx} and recovery time of 12 s according to the tables under chapter 📖 4.4
- Can be obtained in the setting ”x kHz fixed/...” in C00018

Switching frequency If the maximum heatsink temperature is reached, the switching frequency is reduced to 4 kHz.

In the setting ”x kHz var./...” in C00018 the switching frequency is reduced depending on the output current.

Depending on the switching frequency and e.g. the ambient temperature, it may be required to reduce the output current (chapter 4.1, operating conditions).

Rated data for internal brake chopper

Switching threshold V_{BRmax}: 790 V, adjustable

Type	R_{Bmin} [Ω]	I_{BRmax} [A]	P_{BRmax} [kW]	I_{BRd} [A]	P_{Bd} [kW]	t_Z [s]	t_{on} [s]	t_{fp} [s]
Internal brake resistor								
E84Dxxx7514 E84Dxxx1524	220	3.6	2.8	0.5	0.05 1)	-	-	-
E84Dxxx3024 E84Dxxx4024 E84Dxxx7524	-	-	-	-	-	-	-	-
External brake resistor								
E84Dxxx7514	150	5.3	4.2	1.4	1.2	300	60	-
E84Dxxx1524	150	5.3	4.2	2.9	2.5	300	60	-
E84Dxxx3024	47	16.8	13.3	5.7	4.9	300	60	-
E84Dxxx4024	47	16.8	13.3	14.1	12.2	300	60	-

R_{Bmin}	Minimum brake resistance, nominal value ±10 %
I_{BRmax}	Peak current
P_{BRmax}	Peak braking power
I_{BRd}	Continuous current RMS - important for the dimensioning of the cables
P_{Bd}	Continuous braking power
t_Z	Cycle time, periodic load change with running time and recovery time
t_{on}	Running time
t_Z - t_{on}	Recovery time
t_{fp}	Maximum running time without initial load and compliance with the recovery time
1)	**Max. heat Q_B: 3 kWs** Max. power loss in the internal brake resistor P_{Bdav}: see table

	f_{ch} [kHz]	I_a [A]	P_{Bdav} [W] T_{amb} 20 °C	30 °C	40 °C	45 °C
E84Dxxx7514	4	1.9	50	47	-	27
		1.14	50	41	-	21
	8	1.9	48	34	21	-
		1.14	36	23	10	-
E84Dxxx1524	4	3.1	42	28	-	8
		1.86	50	47	-	27
	8	3.1	22	9	0	-
		1.86	48	34	21	-

f_{ch}	Output switching frequency
I_a	Motor current
P_{Bdav}	Permissible power loss in the **internal** brake resistor, averaged over 60 s and dependent on T_{amb} (Linear interpolation/extrapolation via T_{amb} is permissible. Here, the application must limit the power loss in the brake resistor to $P_{Bdav} \leq P_{Bd}$.)
T_{amb}	Ambient temperature

Fuses and cable cross-sections

Operation without external mains choke/mains filter								
Type	Installation according to EN 60204-1 [1]					Installation according to UL [2]		FI [3]
	①	②	L1, L2, L3 - Laying system			③	L1, L2, L3	
			B2	C	F			
	[A]	[A]	[mm²]	[mm²]	[mm²]	[A]	[AWG]	[mA]
E84Dxxxx7514	32	32	6	-	-	30	8	≥ 300
E84Dxxxx1524	32	32	6	-	-	30	8	≥ 300
E84Dxxxx3024	32	32	6	-	-	30	8	≥ 300
E84Dxxxx4024	32	32	6	-	-	30	8	≥ 300
E84DHxxx7524	32	32	6	-	-	30	8	≥ 300

1) These values are recommendations only. Other dimensioning values/laying systems are possible (e.g. according to VDE 0298-4). The cable cross-sections apply under the following conditions: Use of PVC-insulated copper cables, conductor temperature < 70 °C, ambient temperature < 45°C, no bundling of cables or cores, three loaded cores.

2) Use UL-approved cables, fuses and fuse holders only.
UL fuse: voltage ≥ 500 V, tripping characteristic for example ”H”, ”K5” or ”CC”. The cable cross-sections apply under the following conditions: conductor temperature < 75 °C, ambient temperature < 45°C.

3) Universal-current sensitive earth-leakage circuit breaker, short-time delay
If cables are longer than 50 m, the protective circuit-breaker may respond, depending on the cable type and switching frequency.

① Circuit breaker

② Fuse of gG/gL utilisation category or semiconductor fuses of gRL utilisation category

③ Fuse

Observe national and regional regulations

4.3 Current characteristics

The controller limits its maximally possible motor current under the following operating conditions (”current derating”):

- ► If the maximum heatsink temperature is exceeded
  - – In this case, the controller switches independently from switching frequency mode of 16 kHz to 8 kHz and from 8 kHz to 4 kHz (but not from 4 kHz to 2 kHz). This function can be deactivated via C00144.
    When the heatsink temperature continues to rise, the inverter output will be inhibited and the error message ”Trip” occurs. This also occurs when the switching frequency reduction is deactivated.
- ► In case of output frequencies f_{out} < |5 Hz|
- ► As a function of the switching frequency modes ”fixed” or ”variable”

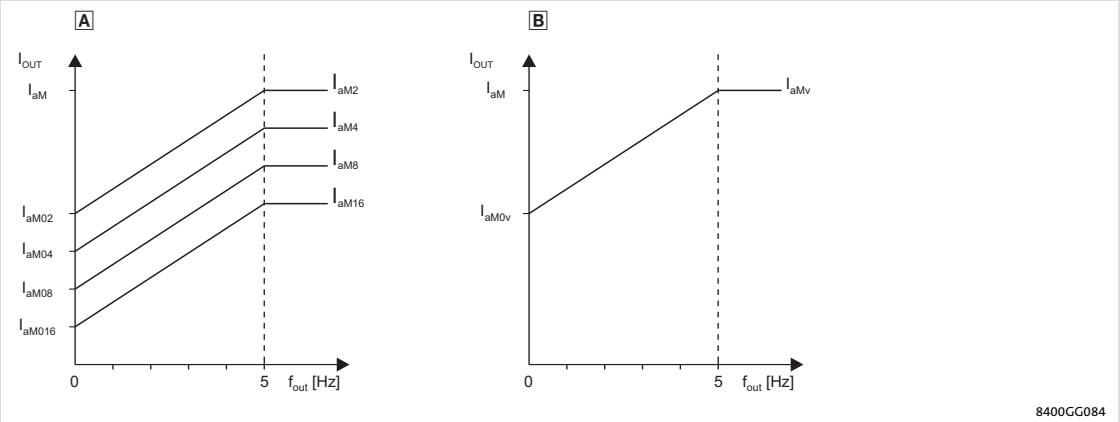

Fig. 4-1 Current derating characteristics

A	Derating curve depending on the fixed switching frequency
B	Derating curve depending on the variable switching frequency

I_{out}	Output current
I_{aM}	Maximum output current (overload current)
I_{aMx}	Maximum output current (overload current) at different switching frequencies: 2kHz, 4kHz, 8kHz and 16kHz
I_{aM0x}	Maximum output current (overload current) at f_{out} = 0Hz and different switching frequencies: 2kHz, 4kHz, 8kHz, 16kHz
I_{aMv}	Maximum output current (overload current) at a variable switching frequency
I_{aM0v}	Maximum output current (overload current) at f_{out} = 0Hz and a variable switching frequency
f_{out}	Field frequency at the output U, V, W

	Maximum output currents [A][1] at a fixed switching frequency and U_{LN} = 400V							
	2 kHz		4 kHz		8 kHz		16 kHz	
Type	I_{aM02}	I_{aM2}	I_{aM04}	I_{aM4}	I_{aM08}	I_{aM8}	I_{aM016}	I_{aM16}
E84Dxxxx7514	4.8	4.8	4.8	4.8	2.8	4.8	1.8	4.0
E84Dxxxx1524	5.9	7.8	5.9	7.8	4.1	7.8	2.5	6.4
E84Dxxxx3024	11.0	14.6	11.0	14.6	9.5	14.6	5.5	9.5
E84Dxxxx4024	14.3	19.0	13.8	19.0	9.5	17.1	5.7	9.5
E84DHxxx7524	16.0	32.0	16.0	32.0	17.0	30.0	10.7	21.3

	Maximum output currents [A][1] at a fixed switching frequency and U_{LN} = 500V							
	2 kHz		4 kHz		8 kHz		16 kHz	
Type	I_{aM02}	I_{aM2}	I_{aM04}	I_{aM4}	I_{aM08}	I_{aM8}	I_{aM016}	I_{aM16}
E84Dxxxx7514	4.8	4.8	4.4	4.4	2.1	4.4	1.4	3.1
E84Dxxxx1524	5.9	7.8	5.9	7.2	3.2	7.2	1.9	3.4
E84Dxxxx3024	11.0	14.6	10.6	13.5	7.4	13.5	4.2	7.4
E84Dxxxx4024	14.3	19.0	10.7	17.6	7.3	13.4	4.3	7.3
E84DHxxx7524	16.0	25.6	12.8	25.6	13.6	24.0	8.5	17.1

1) The shown values apply to the operation with ambient temperatures of up to +45°C for 2/4kHz and up to +40°C for 8/16kHz. For ambient temperatures between +40/45°C and +55°C, a derating from 2.5 %/K to the given values must be observed.

4.4 Overcurrent operation

The controllers are designed for an overcurrent limited in time. The load due to defined, cyclic operation is determined by the ”Ixt” monitoring function. The ”Ixt” function comprises two moving averaging procedures which are checked in parallel:

- ► temporary moving averaging of the apparent motor current for pulse loads
- ► continuous moving averaging of the apparent motor current for permanent loads

Type of utilisation	Utilisation cycle	Monitoring function	
		Condition	Code
Pulse utilisation	15 s	I_{aNx} > 160 %	● Display in C00064/2 ● Display of the maximum value in C00064/1
Permanent utilisation	180 s	The monitoring function is permanently active.	● Display in C00064/3 ● Display of the maximum value in C00064/1

If the maximum value in code C00064/1 exceeds 100%, a ”warning” will be generated or a ”trip” will be triggered (according to setting).

The curves of typical load functions and the simulation of the ”Ixt” function are shown in the following illustration:

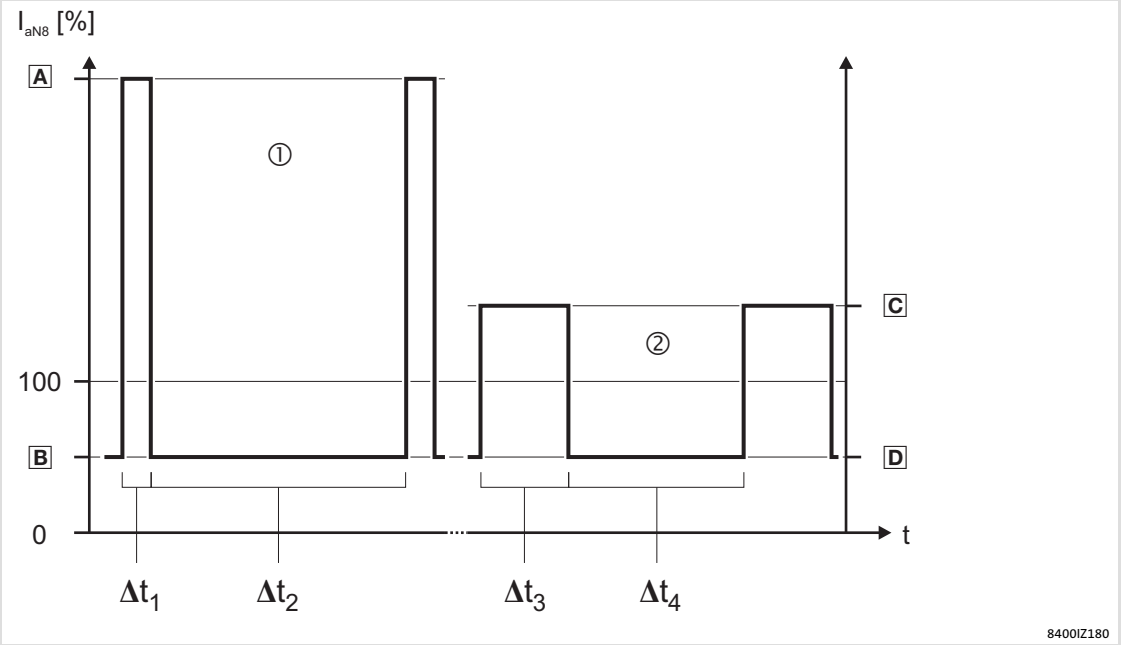

Fig. 4-2 Overcurrent capacity at 45° C

① Pulse load (15 s cycle)
A Peak current
B Unloading current
□$t_{□}$ Peak current period
□$t_{□}$ Unloading current period

Calculation equation:

$$\frac{A \square \square t_{\square} \square B \square \square t_{\square}}{\square t_{\square} \square \square t_{\square}} \square \square \square \square \square$$

② Permanent load (180 s cycle)
C Peak current
D Unloading current
□$t_{□}$ Peak current period
□$t_{□}$ Unloading current period
I_{arx} Rated value of continuous output current

Calculation equation:

$$\frac{C \square \square t_{\square} \square D \square \square t_{\square}}{\square t_{\square} \square \square t_{\square}} \square \square \square \square \square$$

Type	I_{amax}/I_{aR8} [%] in 15-s cycle ①							
	f = 2 kHz		f = 4 kHz		f = 8 kHz		f = 16 kHz	
	A	B	A	B	A	B	A	B
E84Dxxx7514	200	75	200	75	200	75	133	50
E84Dxxx1524							120	45
E84Dxxx3024							133	50
E84Dxxx4024								
E84Dxxx7524								

Type	I_{amax}/I_{aR8} [%] in 180-s cycle ②							
	f = 2 kHz		f = 4 kHz		f = 8 kHz		f = 16 kHz	
	C	D	C	D	C	D	C	D
E84Dxxx7514	150	75	150	75	150	75	100	50
E84Dxxx1524							90	45
E84Dxxx3024							100	50
E84Dxxx4024								
E84Dxxx7524								

Tip!

For calculations of application-specific cycles please contact your Lenze contact person.

4.5 Terminal description

Overview

StateLine, HighLine

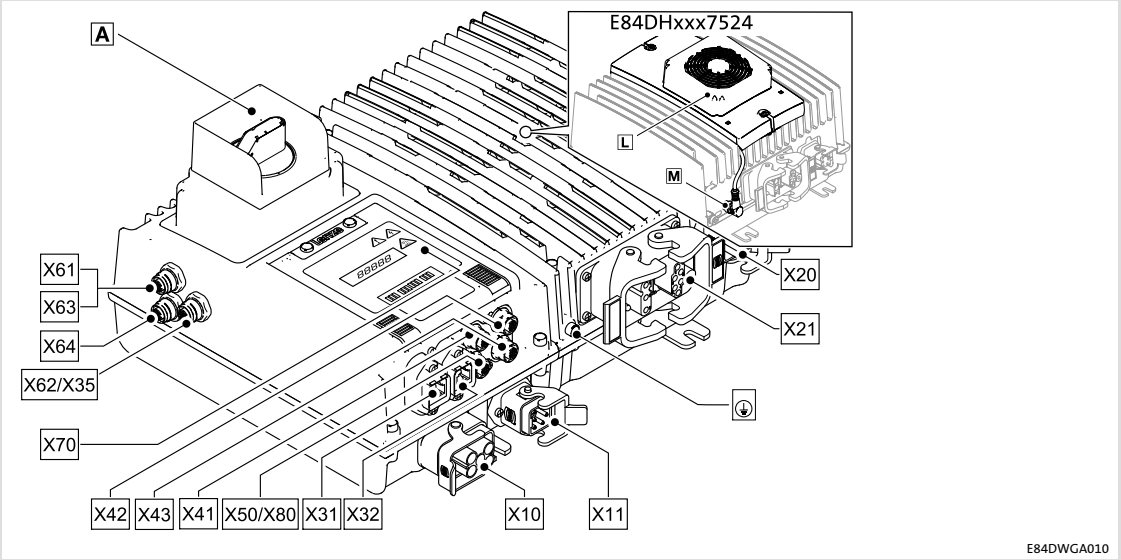

Operational controls and connections		
Pos.	**Function**	**Description**
A	Control element	Optional
⏚	PE connection	for M6 ring cable lug
X10	Mains and 24-V buffer voltage	DESINA Q4/2, pins Optional: Molex (📖 87)
X11	Optional: Loop-through technique - mains and 24-V buffer voltage	DESINA Q4/2, sockets (optional) Optional: Molex
X20	Optional: For external brake resistor	Q5/0, sockets (optional) Optional: Molex
X21	Motor, temperature monitoring and motor holding brake	Q8/0, Modular or 10E, sockets
X31	Fieldbus input	Socket RJ45 or M12, A-coded, male
X32	Fieldbus output	Socket RJ45 or M12, A-coded, female
X35	CAN on board	M12, 5-pole sockets, A-coded
X41	Digital inputs DI1 and DI2	M12, 5-pole sockets, A-coded
X42	Digital inputs DI3 and DI4, also configurable as digital outputs DO1 and DO2	
X43	Digital inputs DI5 and DI6	
X50	Analog input AI, AU	M12, 5-pole sockets, A-coded
X61	Safety system, option 10	M12, 5-pole pins, A-coded
X62	Safety system, option 30	M12, 5-pole sockets, A-coded
X63		M12, 8-pole sockets, A-coded
X64		
X70	Diagnostics	Socket RJ69
X80	Synchronous serial interface (SSI)	M12, 8-pole sockets, A-coded
L	only E84DHxxx7524: External fan	
M	Operating voltage for the external fan	-

EMS version

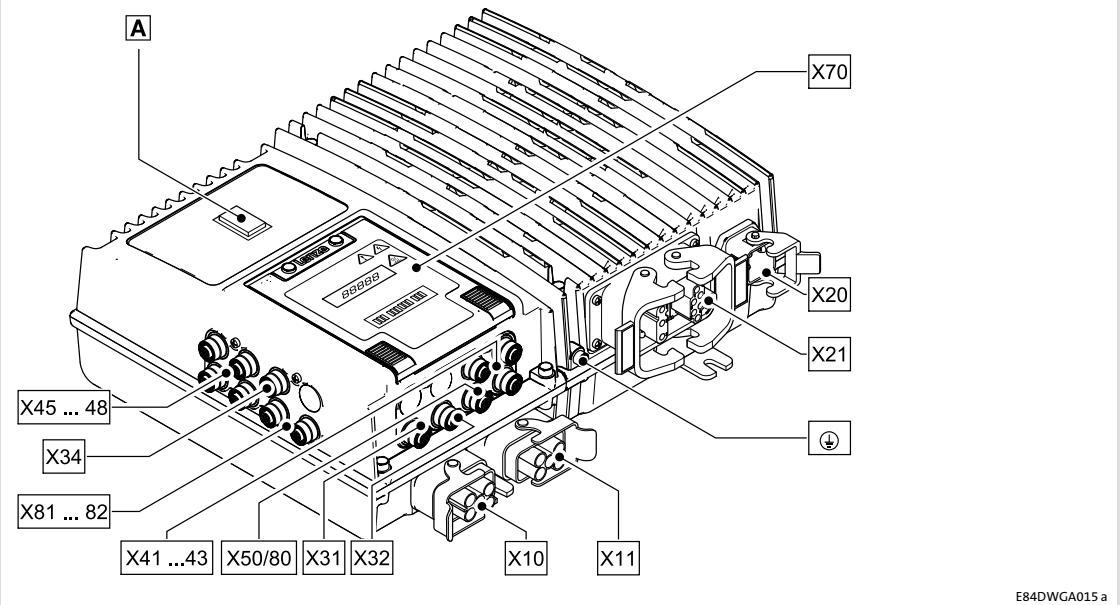

Operational controls and connections		
Pos.	**Function**	**Description**
A	Control element	Optional
⏚	PE connection	for M6 ring cable lug
X10	Mains and 24-V buffer voltage	DESINA Q4/2, pins
X11	Optional: Loop-through technique - mains and 24-V buffer voltage	DESINA Q4/2, sockets (optional) Optional: Molex
X20	Optional: For external brake resistor	Q5/0, sockets (optional) Optional: Molex
X21	Motor, temperature monitoring and motor holding brake	Q8/0, Modular or 10E, sockets
X31	Fieldbus input	M12, A-coded, pins
X32	Fieldbus output	M12, A-coded, sockets
X34	CANopen master PLC	M12, 5-pole, A-coded, sockets
X41	Digital inputs DI1 and DI2	M12, 5-pole sockets, A-coded
X42	Digital inputs DI3 and DI4, also configurable as digital outputs DO1 and DO2	
X43	Digital inputs DI5 and DI6	
X45	Digital inputs DI7 and DI8	M12, 5-pole, A-coded, sockets
X46	Digital inputs DI9 and DI10, also configurable as digital outputs DO3 and DO4	
X47	Digital inputs DI11 and DI12	
X48	Digital inputs DI13 and DI14	
X50	Analog input AI, AU	M12, 5-pole sockets, A-coded
X70	Diagnostics	Socket RJ69
X80	Synchronous serial interface (SSI)	M12, 8-pole sockets, A-coded
X81 **X82**	RS485/RS422	M12, 8-pole, A-coded, sockets

4.6 Supply concept of control voltage

8400 protec controllers generate the 24 V supply voltage of the control electronics from the mains voltage by means of an integrated power supply unit (mains-operated supply).

An external 24 V buffer voltage from a safely separated power supply unit (SELV/PELV) must be connected in order to implement a self-contained supply of the control electronics.

The 24 V supply voltage is required for the control electronics and other components such as fieldbus communication and/or drive-based safety.
In addition, the supply voltage is available at the terminals, irrespective of the fact whether it is fed internally or externally. Information on the supply voltage at the digital and analog terminals is provided under:

- Digital inputs(📖 64)
- Digital outputs(📖 65)
- Analog inputs(📖 66)
- Synchronous serial interface (SSI) (📖 66)

The supply voltage is preferentially used for:

- Connecting potential-free contacts to digital inputs
- Supplying external sensors

At an external 24 V supply voltage, the rated values may deviate according to the voltage source.

4.6.1 Internal 24 V supply voltage

At an internal 24 V supply voltage, the maximally permissible total current of terminals X4x, X50/X8x is 1 A.

4.6.2 External supply voltage 24 V

Detailed information on the X10 and X11 pin assignment with the external 24 V supply is provided on page 87.

Example circuit

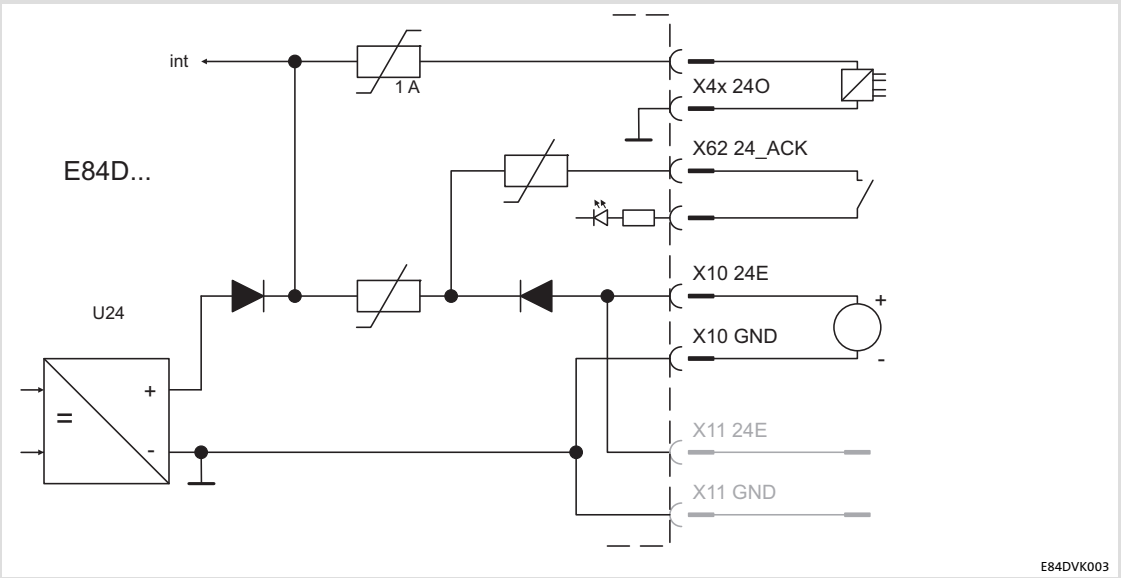

X10 ...	External 24 V buffer voltage at the mains connection
X11 ...	External 24 V supply at the mains connection in loop-through technique (for devices of the E84DxM... version)
X4x ...	24 V supply of the digital sensors
X62 ...	24 V supply of the safety system
U24	Internal 24 V supply
int	Voltage supply of the control electronics

An external 24 V supply voltage must comply with the following rated values to ensure trouble-free operation of the controller.

X10		
Pin / Name	**Feature**	**Rated value**
11 / 24E 12 / GND	Connection for external 24 V supply voltage by a safely separated power supply unit (required for feeding the control electronics and the communication module independent of the mains supply)	24 V in accordance with IEC 61131-2 19.2 ... 28.8 V Max. residual ripple ± 5 % SELV/PELV
	Suppression of voltage pulses	Suppressor diode 36 V, bidirectional
	Electric strength of external voltage	+30 V
	Excess current release	Automatically resettable
	Polarity reversal protection	When polarity is reversed: No function and no destruction
	Current consumption	Approx. 0.6 A during operation if inputs/outputs are not configured Max. 2.0 A during operation with typical input/output configuration
		Max. 1.5 A starting current for 100 ms
	Capacity to be charged	2000 µF
	Max. load for plug contacts	10 A

X11		
Pin / Name	**Feature**	**Rated value**
11 / 24E 12 / GND	Connection for an external 24 V supply voltage (loop-through arrangement)	24 V according to IEC 61131-2 (cp. X10)
	Number of devices included in the loop-through arrangement	is limited by the voltage drop due to max. current= 10 A and max. cable cross-section = 2.5 mm^2
	Max. load for plug contacts	10 A

X4x, X50/X8x		
Pin / Name	**Feature**	**Rated value**
1 / 24O 3 / GIO	24 V supply of the external sensors or potential-free contacts	External supply at 24E: voltage drop < 2.5 V Internal supply: DC 18 ... 28 V
	Max. output current	200 mA per output
	Total current for X4x, X50/X8x	1 A
	Electric strength of external voltage	+30 V
	Excess current release	Automatically resettable

4.7 Control terminals

4.7.1 Digital inputs

X41 ... X43		
Pin / Name	**Features**	**Rated value**
4 / DI1 2 / DI2	Digital input 1/2 at X41	In accordance with IEC 61131-2, type 1 or Two-track frequency input, for HTL encoders 0 ... 100 kHz
4 / DI3 2 / DI4	Digital input 3/4 at X42	In accordance with IEC 61131-2, type 1 DI4 - typical delay time: ● 5 µs at rising edge ● 25 µs at falling edge
4 / DI5 2 / DI6	Digital input 5/6 at X43	In accordance with IEC 61131-2, type 1 or Single-track frequency input, 0 ... 7.5 kHz DI5/DI6 - typical delay time: ● 5 µs at rising edge ● 25 µs at falling edge
1 / 24O 3 / GIO	24 V supply of the external sensors or potential-free contacts	External supply at 24E: Voltage drop < 2.5 V
	Total current for X4x, X50/X8x	1 A

Extensions in the EMS version

X45 ... X48		
Pin / Name	**Features**	**Rated value**
4 / DI7 2 / DI8	Digital input 7/8 at X45	according to IEC 61131-2, type 1
4 / DI9 2 / DI10	Digital input 9/10 at X46 (configurable with DO3/DO4)	
4 / DI11 2 / DI12	Digital input 11/12 at X47	
4 / DI13 2 / DI14	Digital input 13/14 at X48	
5 / n. c.	not assigned	-
1 / 24O 3 / GIO	24 V supply of the external sensors or potential-free contacts	External supply at 24E: Voltage drop < 2.5 V
	Total current for X41 ... X48	1 A

4.7.2 Digital outputs

X42 - configured		
Labelling	**Features**	**Rated value**
4 / DO1 2 / DO2 3 / GIO	Digital output	According to IEC61131-2, type 1
	External-voltage protected	up to +30 V Integrated polarity reversal protection diode for switching inductive loads
	Isolation	📖 76
	Level	LOW < +5 V High > +15 V
	Time-dependent behaviour	LOW - HIGH / HIGH - LOW max. 250 µs
	Behaviour during overload	Reduced voltage or periodic switch-off/on
	Behaviour in case of reset and during switch-on	Outputs are switched-off (LOW)
	Cycle time	1 ms
	Max. output current	200 mA per output
1 / 24O 3 / GIO	24 V supply of the external sensors or potential-free contacts	External supply at 24E: Voltage drop < 2.5 V
	Total current for X4x, X50/X8x	1 A

Extensions in the EMS version

X46 - configured		
Labelling	**Features**	**Rated value**
4 / DO3 2 / DO4 3 / GIO	Digital output	According to IEC61131-2, type 1
	External-voltage protected	up to +30 V Integrated polarity reversal protection diode for switching inductive loads
	Isolation	📖 76
	Level	LOW < +5 V High > +15 V
	Time-dependent behaviour	LOW - HIGH / HIGH - LOW max. 250 µs
	Behaviour during overload	Reduced voltage or periodic switch-off/on
	Behaviour in case of reset and during switch-on	Outputs are switched-off (LOW)
	Cycle time	1 ms
	Max. output current	200 mA per output
1 / 24O 3 / GIO	24 V supply of the external sensors or potential-free contacts	External supply at 24E: Voltage drop < 2.5 V
	Total current for X4x, X50/X8x	1 A

4.7.3 Analog inputs

X50		
Pin / Name	**Feature**	**Rated value**
4 / AU 3 / GA	Voltage input	0.3 ... 10 V (V < 0.3 V □ ”0”)
	Input resistance	> 80 kΩ
	Sampling frequency	1 kHz (1 ms)
	Accuracy	± 0.1 V
	Electric strength of external voltage	± 15 V
	A/D converter	Resolution 10 bits + sign Error: 1 digit ≡ 0.1 %, based on the final value
2 / AI 3 / GA	Current input, parameterisable	0.6 ... +20 mA (I < 0.6mA □ ”0”)
		4 ... +20 mA, fail-safe
	Input resistance	220 Ω
	Input current in case of open circuit	Display ”0” (I < 0.6 mA)
	Sampling frequency	1 kHz (1 ms)
	Accuracy	± 0.2 mA
	Electric strength of external voltage	± 15 V
	A/D converter	10 bit resolution Error: 1 digit ≡ 0.1 %, based on the final value
1 / 24O 3 / GIO	24 V supply of the external sensors or potential-free contacts	External supply at 24E: Voltage drop < 2.5 V
	Total current for X4x, X50/X8x	1 A

4.7.4 Synchronous serial interface (SSI)

X80		
Pin / Name	**Feature**	**Rated value**
1 / CLK+	Pos. clock signal	Bit rate: 100 .... 1000 kbits Data word width: 1 ... 32 bits (effective) Code: Gray an binary
2 / CLK-	Neg. clock signal	
3 / Data+	Pos. data line	
4 / Data-	Neg. data line	
5 / n. c.	Not assigned	
6 / n. c.	Not assigned	
8 / 24O 7 / GIO	24 V supply of the external SSI encoders	External supply at 24E: Voltage drop < 2.5 V
	Total current for X4x, X50/X8x	1 A

4.7.5 Remote control (IrRC)

IrRC (Infrared Remote Control)		
Pin / Name	Features	Rated value
-	Reach	~5 m
	Angle of incidence	~30 °

4.7.6 Interfaces of the EMS version

CANopen Master PLC

X34		
Pin / Name	**Features**	**Rated value**
1 / ⏚	Shielding (functional earth)	-
2 / n. c.	not assigned	-
3 / CAN_GND	CAN GND	Bit rate: adjustable up to 1 Mbit Isolation: Function separation
4 / CANH	CAN HIGH	
5 / CANL	CAN LOW	

RS485/422 PLC

X81/X82			
Pin / Name	Features		Rated value
	RS485	RS422	
The assignment depends on the device version (📖 135).	24 V supply		according to IEC 61131-2, type 1
	RS485A’	Reception + (Data+)	• according to: – ANSI/TIA/EIA-485-A-98 – ANSI/TIA/EIA-422 • Bit rate: Adjustable up to 115.2 kbit • Isolation: Function separation • At RS422, PLC supports evaluation of SSI encoders (max. 150 kHz).
	RS485B’	Reception (Data-)	
	RS485A	Transmission+ (CLK+)	
	RS485B	Transmission- (CLK-)	

Infrared interface (IrDA)

IrDA (Infrared Data Association)		
Pin / Name	Features	Rated value
-	Reach	~1 m
	Angle of incidence	~30 °

4.7.7 Motor holding brake connection

Version according to type code: B (AC voltage: fast switch)

X21		
Pin / Name	**Feature**	**Rated value**
	Connection of a motor holding brake to the external brake rectifier in the motor terminal box	
	Max. switching capacity	55 W
	Internal switching time	< 10 ms
	Isolation	Basic insulation (📖 76)
	Time-dependent behaviour	See software manual, chapter holding brake control / parameterisation
	Behaviour in case of reset and during switch-on	Outputs are switched-off / open
	Operating frequency	Max. 60/min
	Short-circuit strength	no
c2 / ~ c3 / ~	Switched mains voltage (L1/L2) for a brake rectifier	
	Switching voltage	AC 400/480 V according to IEC 61131-2
c4 / S1 c5 / S2	Potential-free contact for switching the external brake rectifier on the DC side. For this purpose, the brake rectifier must be equipped with a spark suppressor.	
	Switching voltage	DC 250 V

Version according to type code: F (DC voltage: integrated brake rectifier)

X21			
Pin / Name	**Feature**		**Rated value**
6 / BD1 4 / BD2	Connection of a motor holding brake		
	Integrated brake rectifier		Half-wave rectification with increased ripple
	Output voltage (dependent on mains voltage)	AC 400 V	DC 180 V
		AC 500 V	DC 225 V
	Max. output power		55 W
	Internal switching time		< 1 ms
	Time-dependent behaviour		See software manual, chapter holding brake control / parameterisation
	Short-circuit strength		no
	Behaviour in case of reset and during switch-on		Outputs are switched off
	Operating frequency		Max. 60/min

Version according to type code: V (24 V DC voltage)

(only EMS version)

X21		
Pin / Name	**Feature**	**Rated value**
6 / BD1 4 / BD2	Connection of a motor holding brake	
	Output voltage (dependent on the supply voltage)	DC 24 V
	Max. output power	48 W
	Internal switching time	< 1 ms
	Time-dependent behaviour	See software manual, chapter holding brake control / parameterisation
	Short-circuit strength	Yes
	Behaviour in case of reset and during switch-on	Outputs are switched off
	Operating frequency	Max. 60/min

Version according to type code: C (DC voltage: cold brake)

X21			
Pin / Name	**Feature**		**Rated value**
6 / BD1 4 / BD2	Connection of a motor holding brake		
	Voltage boost for 0.3 s		130 %
	Voltage reduction (cold brake) after 0.3 s		65 % Half-wave rectification with increased ripple
	Output voltage (dependent on mains voltage)	AC 400 V	DC 180 V
		AC 500 V	DC 225 V
	Max. output power		55 W
	Internal switching time		< 1 ms
	Time-dependent behaviour		See software manual, chapter holding brake control / parameterisation
	Short-circuit strength		no
	Behaviour in case of reset and during switch-on		Outputs are switched off
	Operating frequency		Max. 60/min

STOP

Stop!

Damage of the devices

A defective motor holding brake or a short circuit on the X21 connection (motor and built-on accessories) causes internal damage to the device.

Possible consequences:

► If a defective motor holding brake is connected, the replacement device is also damaged immediately.

Protective measures:

► When devices are replaced due to malfunction of the brake control, ensure that defect-free motor holding brakes are connected.

► Check whether the motor holding brake and the connecting cable are free from defects.

► Replace or repair defective components.

5 Mechanical installation

5.1 Important notes

- ► If the cooling air is polluted (fluff, (conductive) dust, soot, aggressive gases), take adequate countermeasures, as e.g.:
  – Cleaning of the cooling ribs on the controller in regular intervals
  – Separate air guide
- ► Possible mounting position:
  – Vertically suspended
- ► Maintain the specified free spaces above and below the controller to other installations!
- ► Ensure untroubled cooling and exhaust air flow.
- ► In case of continuous vibrations or shocks use vibration dampers.

Depending on the size, four or six screws M6 x >10 mm are required for the mounting. The mounting location and material must ensure a durable mechanical connection.

For fastening the devices, we recommend:

- ► M6 cheese head screw, hexagon socket, according to DIN 912/ISO 4762
- ► M6 cheese head screw, torx, according to ISO 14579

5.2 Dimensions

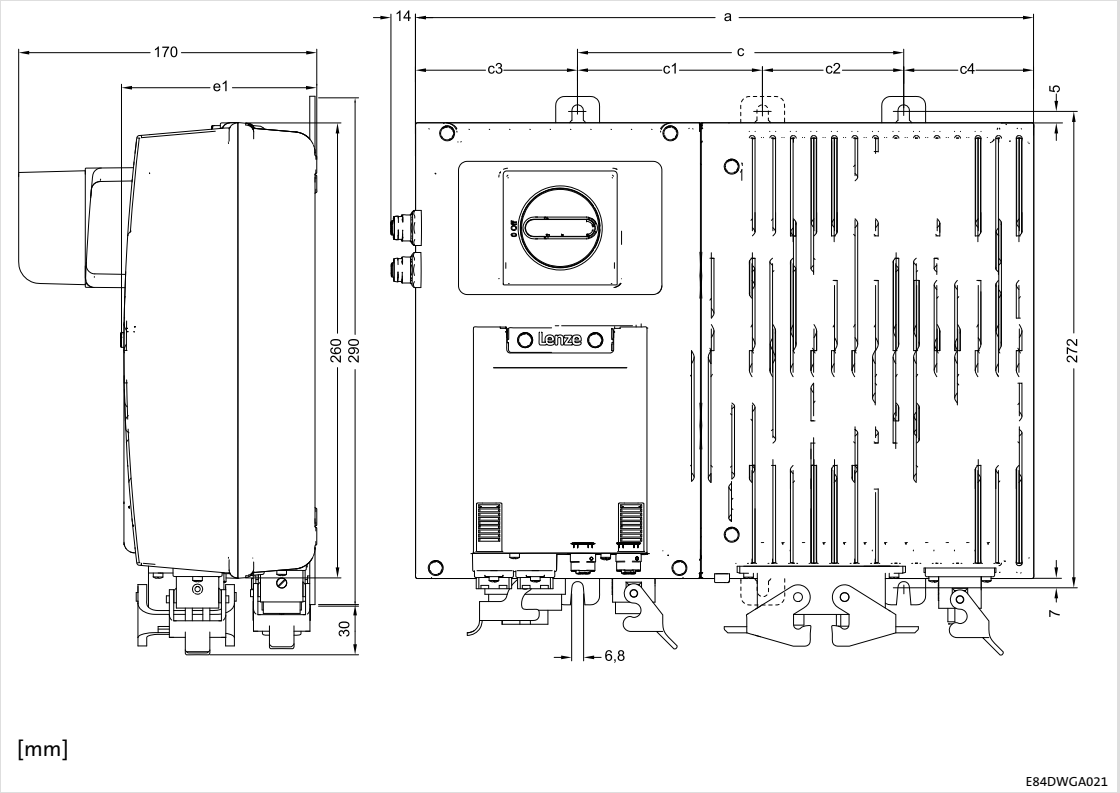

	[mm]						
	a	c	c1 = c2	c3	c4	e1	[kg]
E84Dxxxx7514 E84Dxxxx1524	353	186	-	92	75	110	7.0 ... 7.5
E84Dxxxx3024 E84Dxxxx4024	434	290	145	92	52	148	8.9 ... 9.4
E84DHxxx7524	434	290	145	92	52	195	9.1 ... 9.6

5.3 Mounting clearance

Note!

The actual free space is determined by the connectors used and the cable bending radii.

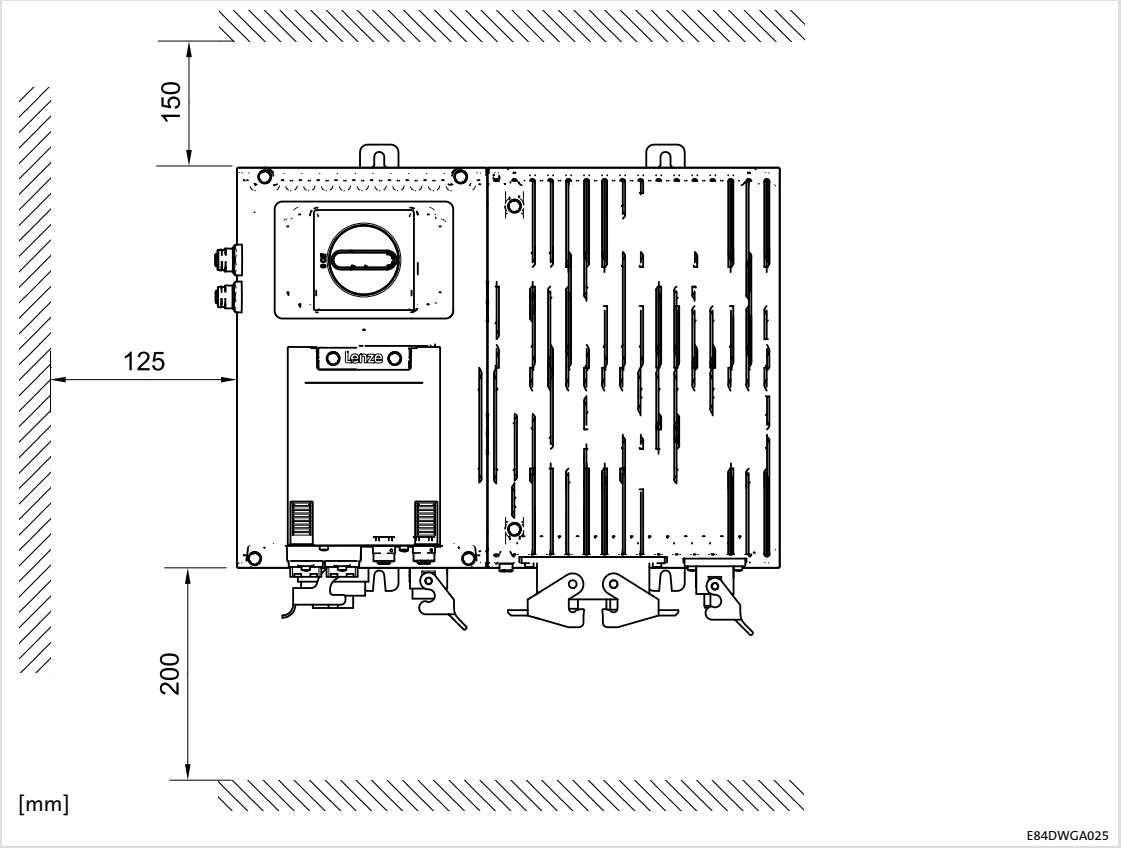

6 Electrical installation - HighLine/StateLine version

6.1 Important notes

Danger!

Dangerous electrical voltage

All power terminals remain live for up to three minutes after mains disconnection.

Possible consequences:

► Death or severe injuries when touching the power terminals.

Protective measures:

► Switch off the power supply and wait for at least three minutes before working on the power terminals.

► Make sure that all power terminals are deenergised.

Danger!

► The contacts of the power connectors **X10, X11, X20 and X21** may carry dangerous voltage if the frequency inverter is connected to the mains. Thus, deenergise the frequency inverter before working on it.

► Earth the device by means of X10 and by connecting it to functional earth (earthing bolt) in order to prevent injury to persons and malfunctioning.

Danger!

Dangerous voltage

The leakage current to earth (PE) is > 3.5 mA AC or > 10 mA DC.

Possible consequences:

► Death or severe injuries when the device is touched in the event of a fault.

Protective measures:

► Implement the actions required in the EN 61800-5-1. Especially:
- Fixed installation
- PE connection must conform to standards (PE conductor diameter $\geq 10\ mm^2$ or PE conductor must be connected twice)

Stop!

No device protection if the mains voltage is too high

The mains input is not internally fused.

Possible consequences:

► Destruction of the device if the mains voltage is too high.

Protective measures:

► Observe the maximally permissible mains voltage.

► Fuse the device correctly on the supply side against mains fluctuations and voltage peaks.

Stop!

The device contains components that can be destroyed by electrostatic discharge!

Before working on the device, the personnel must ensure that they are free of electrostatic charge by using appropriate measures.

Stop!

Pluggable terminal strips or plug connections

Plugging or removing the terminal strips or plug connections during operation may cause high voltages and arcing.

Possible consequences:

► Damage of the devices

Protective measures:

► Switch off device.

► Only plug or remove the terminal strips or plug connections in deenergised status.

Note!

Switching on the controller motor side is permissible for safety shutdown (emergency stop) and for operation of several motors on the controller in V/f operating mode.

Please observe the following:

► When switching with the controller is enabled, you can activate monitoring functions of the controller. If no monitoring function is activated, switching is permissible.

► The switching elements at the motor end must be rated for DC voltages V_{DCmax} = 800 V.

Note!

Only with the **control element**

► **C** = service switch with protective function

the device can be disconnected from the mains voltage.

Note!

The counter plugs of the power terminals must be equipped with connector housings with a vertical outgoing cable.

Note!

► **It is absolutely necessary to keep the plastic caps on the connectors for the control terminals and interfaces!**

► During transport, storage, and operation, ports not used must be sealed using the plastic caps, in order to maintain the product features in accordance with the technical data.

► Only if this note is observed, the product features certified are ensured for devices with a safety system.

EMC-compliant wiring

Note!

► Establish a good conductive connection to protective earth by means of a copper-braid cable (e.g. mounting surface, machine earth or building earth).

► Lay control cables and data lines separately from the motor cables.

► Connect the shields of the control cables and data lines **at both ends**.

6.1.1 Electrical isolation

The protective insulation of the ”8400 Inverter Drives” controllers is implemented according to EN 61800-5-1. The following illustration shows the insulation concept.

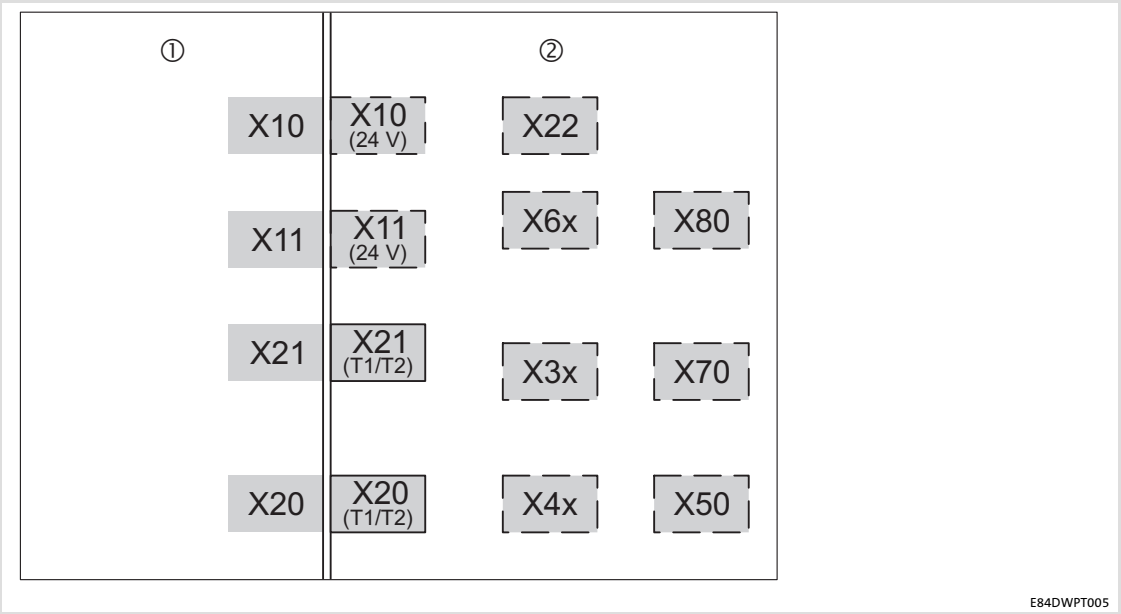

Fig. 6-1 Electrical isolation between power terminals, control terminals and housing

⋮	Isolation by functional insulation
|	Isolation by basic insulation
||	Safe isolation by double or reinforced insulation Protection against accidental contact is guaranteed without any further measures.
①	Power connections
X10, X11	Mains
X21	Motor
X20	Brake resistor
②	Control terminals
X10 (24 V)	24 V supply voltage
X11 (24 V)	
X20 (T1/T2)	brake resistor temperature monitoring
X21 (T1/T2)	Motor temperature monitoring
X22	Voltage supply of external fan - only for 7.5 kW devices
X3x	Fieldbus communication
X4x	Digital inputs/outputs
X50	Analog input
X6x	Safety system
X70	Diagnostics
X80	SSI

6.1.2 Device protection

- ► In case of condensation, do not connect the controller to the mains voltage before the moisture has evaporated completely.
- ► The controller must be protected by external fuses.
- ► Unused control inputs and outputs must be closed according to the intended type of protection.

6.1.3 Maximum motor cable length

- Keep the motor cable as short as possible since this has a positive effect on the drive behaviour.
- The maximally permissible motor cable length is: 20 m, shielded
  - at rated mains voltage
  - at a switching frequency of 8 kHz

Note!
If the conditions for electromagnetic compatibility must be observed, the permissible cable lengths may vary.

6.1.4 Motor protection

- Extensive protection against overload:
  - By overcurrent relays or temperature monitoring.
  - We recommend the use of PTC thermistors or thermostats to monitor the motor temperature.
  - PTC thermistors or thermostats can be connected to the controller.
  - For monitoring the motor, we recommend the use of the I^2xt monitoring.
- Only use motors with an insulation suitable for the inverter operation:
  - Insulation resistance: min. $\hat{u}$ = 1.5 kV, min. du/dt = 5 kV/µs
  - When using motors with an unknown insulation resistance, please contact your motor supplier.

6.2 Safety instructions for the installation according to U_L or U_R

Original - English

Warnings!

- ► Branch circuit protection:
  Suitable for use on a circuit capable of delivering not more than 200 000 rms symmetrical amperes, 500 V maximum.
  – When Protected by CC, T, or J Class Fuses.
- ► Integral solid state protection does not provide branch circuit protection. Branch circuit protection must be provided in accordance with the National Electrical Code and any additional local codes.
- ► Overload Protection = 125 % of rated FLA.
- ► Use 75 °C copper wire only, except for control circuits.
- ► Use Class 1 wire only.
- ► Enclosed Device, suitable for use in a UL Type 4X (Indoor) Environment.
- ► Suitable for use in a surrounding air temperature of 45 °C, and
  – additionally 55 °C when de-rating rules are followed.
- ► Suitable for use in a compartment handling conditioned air.
- ► The device is provided with internal overload protection. For information on the protection level of the internal overload protection for a motor load, see the corresponding Software Manual or Online Help under the topic ”Motor load monitoring (I^2xt)”. This function has to be activated; i. e. the reaction must be changed from ”Warning” (factory setting) to ”Fault”.
- ► For information on rating and proper connection of the thermal protector (only for connection to motors having integral thermal protection), see the corresponding Manual or Online Help.

Warnings!

The opening of branch-circuit protective device may be an indication that a fault has been interrupted.

To reduce the risk of fire or electric shock, current-carrying parts and other components of the controller should be examined and replaced if damaged or equivalent.

6.3 Safety instructions for the installation according to U_L or U_R

Original - French

Warnings!

- ► Branch circuit protection:
  Suitable for use on a circuit capable of delivering not more than 200 000 rms symmetrical amperes, 500 V maximum.
  – When Protected by CC, T, or J Class Fuses.
- ► Integral solid state protection does not provide branch circuit protection. Branch circuit protection must be provided in accordance with the National Electrical Code and any additional local codes.
- ► Overload Protection = 125 % of rated FLA.
- ► Use 75 °C copper wire only, except for control circuits.
- ► Use Class 1 wire only.
- ► Enclosed Device, suitable for use in a UL Type 4X (Indoor) Environment.
- ► Suitable for use in a surrounding air temperature of 45 °C, and
  – additionally 55 °C when de-rating rules are followed.
- ► Suitable for use in a compartment handling conditioned air.
- ► The device is provided with internal overload protection. For information on the protection level of the internal overload protection for a motor load, see the corresponding Software Manual or Online Help under the topic ”Motor load monitoring (I^2xt)”. This function has to be activated; i. e. the reaction must be changed from ”Warning” (factory setting) to ”Fault”.
- ► For information on rating and proper connection of the thermal protector (only for connection to motors having integral thermal protection), see the corresponding Manual or Online Help.

Warnings!

The opening of branch-circuit protective device may be an indication that a fault has been interrupted.

To reduce the risk of fire or electric shock, current-carrying parts and other components of the controller should be examined and replaced if damaged or equivalent.

6.4 Installation according to EMC (installation of a CE-typical drive system)

Design of the cables

- ► It is imperative to comply with the regulations concerning minimum cross-sections of PE conductors. The cross-section of the PE conductor must be at least as large as the cross-section of the power connections.
- ► The cables used must comply with the approvals required for the location (e.g. UL).

6.4.1 Shielding

Requirements

- ► The effectiveness of a shielded cable is reached by:
  - – Providing a good shield connection through large-surface shield contact.
  - – Using only braided shields with low shield resistance made of tin-plated or nickel-plated copper braid.
  - – Using braided shields with an overlap rate > 70 % and an overlap angle of 90 °.
  - – Keeping unshielded cable ends as short as possible.

Use system cables or shielded cables for these connections:

- ► Motor
- ► External brake resistor (Mounting Instructions of the brake resistor)
- ► Motor holding brake (shielding is required when being integrated into the motor cable; connection to optional motor brake control)
- ► Motor temperature monitoring
- ► Analog signals (inputs and outputs; single-sided shield connection to the controller)
- ► Fieldbus communication (e.g. CANopen ,PROFIBUS, PROFINET, ...)
- ► Safety system
- ► CAN on board

The following connections need not be shielded:

- ► Mains
- ► 24-V supply
- ► Digital signals (inputs and outputs).
  - – We recommend to use shielded cables for a cable length from approximately 5 m on or in environments with strong interferences.

Connection system

- ► Directly apply the shielding in the plug.
  - – Extensively apply the shielding and ensure electrical conductivity.
  - – If required, additionally connect the shield to the cable clamp rail.

6.4.2 Motor cable

- ► Only use shielded motor cables with braids made of tinned or nickel-plated copper. Shields made of steel braids are not suitable.
  - – The overlap rate of the braid must be at least 70 % with an overlap angle of 90 °.
- ► The cables used must correspond to the requirements at the location (e.g. EN 60204-1).
- ► Use Lenze system cables.
- ► Extensively apply the shielding in the plug and attach it in a way which ensures electrical conductivity.
- ► The motor cable is optimally installed if
  - – it is separated from mains cables and control cables,
  - – it only crosses mains cables and control cables at right angles,
  - – it is not interrupted.
- ► If the motor cable must be opened all the same (e.g. due to chokes, contactors, or terminals):
  - – The unshielded cable ends may not be longer than 100 mm (depending on the cable cross-section).
  - – Install chokes, contactors, terminals etc. spatially separated from other components (with a min. distance of 100 mm).
  - – Install the shield of the motor cable directly before and behind the point of separation to the mounting plate with a large surface.
- ► Connect the shield with a large surface to PE in the terminal box of the motor at the motor housing.
  - – Metal EMC cable glands at the motor terminal box ensure a large surface connection of the shield with the motor housing.

6.4.3 Control cables

- ► Control cables must be shielded to minimise interference injections.
- ► For lengths of 200 mm and more, use only shielded cables for analog and digital inputs and outputs. Under 200 mm, unshielded but twisted cables may be used.
- ► Connect the shield correctly:
  - – The shield connections of the control cables must be at a distance of at least 50 mm from the shield connections of the motor cables and DC cables.
  - – Connect the shield of digital input and output cables at both ends.
  - – Connect the shield of analog input and output cables at one end (at the drive controller).
- ► To achieve an optimum shielding effect (in case of very long cables, with high interference) one shield end of analog input and output cables can be connected to PE potential via a capacitor (e.g. 10 nF/250 V) (see sketch).

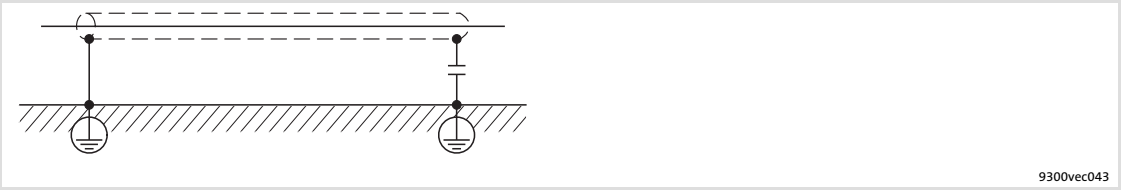

Fig. 6-2 Shielding of long, analog control cables

6.4.4 Wiring

Notes on the laying of cables:

- ► In the case of greater cable lengths, a greater cable distance between the cables is required.
- ► In the case of parallel routing (cable trays) of cables with different types of signals, the degree of interference can be minimised by using a metallic cable separator or isolated cable ducts.

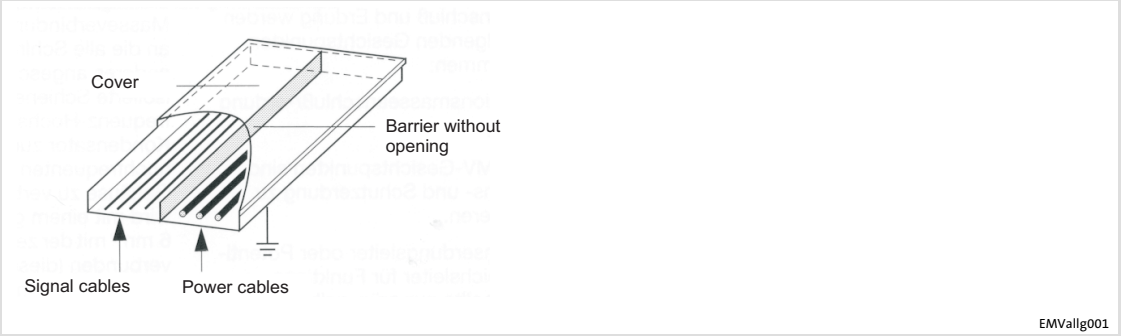

Fig. 6-3 Cable routing in the cable duct with barrier

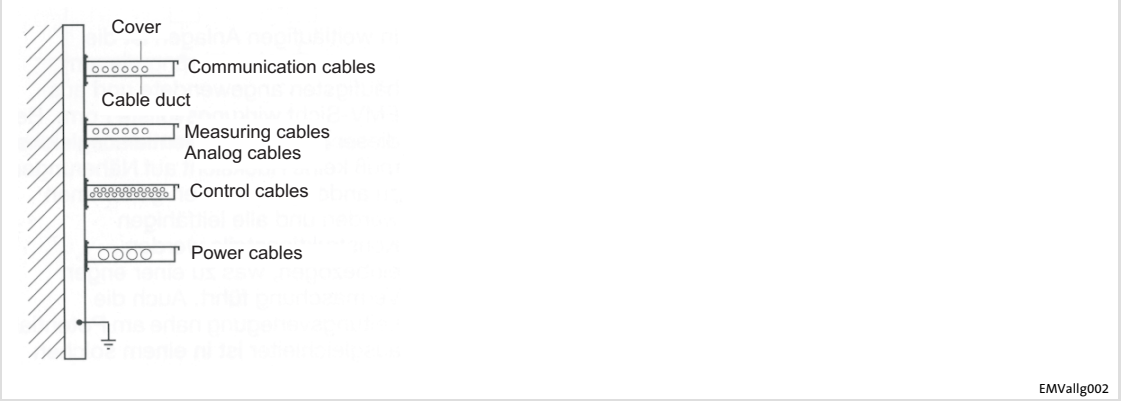

Fig. 6-4 Cable routing in separated cable ducts

Wiring on the mains side

- ► It is possible to connect the controller, mains choke or RFI filter to the mains via single cores or unshielded cables.
- ► The cable cross-section must be rated for the assigned fuse protection (VDE 0160).

Wiring on the motor side

Stop!

The motor cable is highly susceptible to interference. Therefore you will achieve an optimum wiring on the motor side if you

- ► exclusively use shielded and low-capacitance motor cables.
- ► do **not** integrate any further cable into the motor cable (e.g. for blowers etc.).
- ► shield the supply cable for temperature monitoring of the motor (PTC or thermostat) and install it separately from the motor cable.

Special conditions allow you to integrate the supply cable for temperature monitoring of the motor into the motor cable: (📖 81)

Danger!

Uncontrolled motor movements can occur

If the motor cable is damaged, a short circuit between the brake control cables and the motor cables can cause motor movements with low torque.

Possible consequences:

- ► Personnel in the vicinity of the motor can be injured.

Protective measures:

- ► Install motor cable in a protected way (e.g. in a cable duct).

6.4.5 Detecting and eliminating EMC interferences

Fault	Cause	Remedy
Interferences of analog setpoints of your own or other devices and measuring systems	Unshielded motor cable	Use shielded motor cable
	Shield contact is not extensive enough	Carry out optimal shielding as specified
	Shield of the motor cable is interrupted by terminal strips, switched, etc.	• Separate components from other component part with a minimum distance of 100 mm • Use motor choke/motor filter
	Install additional unshielded cables inside the motor cable (e.g. for motor temperature monitoring)	Install and shield additional cables separately
	Too long and unshielded cable ends of the motor cable	Shorten unshielded cable ends to maximally 40 mm

6.5 Devices in a power range of 0.75 ... 7.5 kW (3/PE AC 400 V)

6.5.1 Example circuits

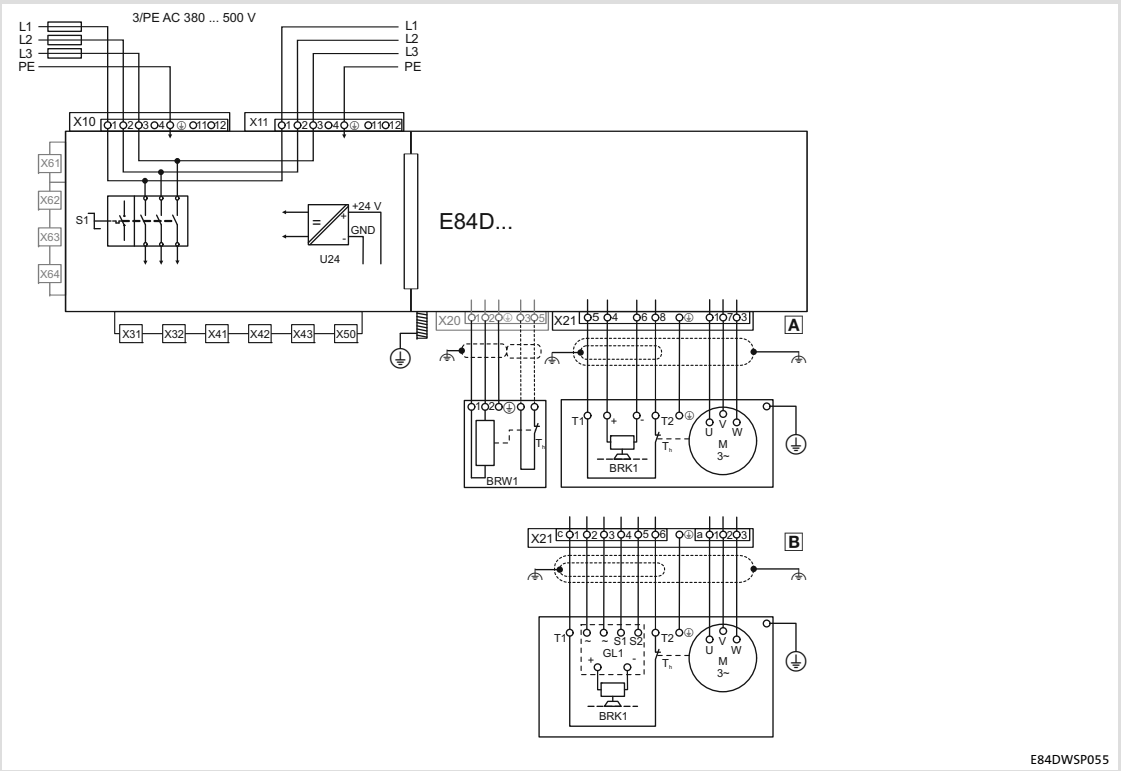

E84D...	8400 protec controller
S1	Service switch control element (optional)
U24	Supply voltage 24 V internal
BRK1	Spring-applied brake
GL1	Spring-applied brake control
BRW1	External brake resistor at optional terminal X20 - for E84DHxxx7524: Direct connection of the thermal contact
T_h	PTC thermistor (PTC) or thermal contact (NC contact)
M	Motor
A	Motor connection system: Plug type Q8/0
B	Motor connection system: Plug type Modular
X31 ... X50	Communication, inputs and outputs
X61 ... X64	Optional: Drive-based safety

6.5.2 Terminal assignment of the power connections

Mains connection

X10 - port for mains			
Pin	**Connection**	**Description**	**Data**
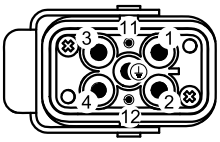 84DWTX0100		DESINA type Q4/2, pins	
1	L1	Mains phase L1	Max. 6 mm²
2	L2	Mains phase L2	
3	L3	Mains phase L3	
⏚	PE	PE conductor	
11	24E	External 24-V power supply	Max. 2.5 mm²
12	GND	External reference potential	

X10 - mains connection - device version E84Dx**D**... and E84Dx**H**...			
Pin	**Connection**	**Description**	**Data**
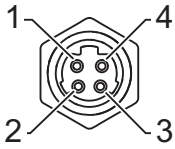 E84DWTXXMO 1		Type Molex, Brad Mini-Change, pins	
1	L1	Mains phase L1	max. 14 AWG
2	L2	Mains phase L2	
3	L3	Mains phase L3	
4	PE ⏚	PE conductor	

X11 - mains loop-through technique (optional)			
Pin	**Connection**	**Description**	**Data**
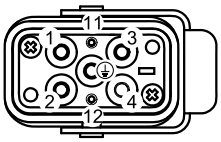 84DWTX0110		DESINA type Q4/2, sockets	
1	L1	Phase L1	Max. 6 mm²
2	L2	Phase L2	
3	L3	Phase L3	
⏚	PE	PE conductor	
11	24E	External 24-V power supply	Max. 2.5 mm²
12	GND	External reference potential	

X11 - mains connection - device version E84Dx**D**...			
Pin	**Connection**	**Description**	**Data**
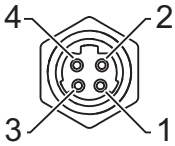 E84DWTXXMO 4		Type Molex, Brad Mini-Change, pins	
1	n. c.	not assigned	max. 16 AWG
2	24E	External 24 V voltage supply	
3	GND	External reference potential 24 V	
4	n. c.	not assigned	

X11 - mains connection - device version E84Dx**H**...			
Pin	**Connection**	**Description**	**Data**
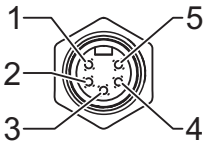 E84DWTXXMO 2		Type Molex, Brad Mini-Change, pins	
4	24E	External 24 V voltage supply	max. 16 AWG
2	GND	External reference potential 24 V	
3	PE ⏚	PE conductor	
1, 5	n. c.	not assigned	

Motor connection

X21 - motor connection - device version E84Dxx**C**...			
Pin	**Connection**	**Description**	**Data**
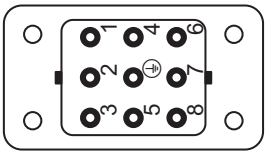 84DWTX0210		Type Q8/0, sockets Use Lenze system cable: EYP0037xxxxxxxxQ10, 8-core, 1.5 mm² EYP0038xxxxxxxxQ11, 8 core, 2.5 mm²	
2	n. c.	Grooved pin as a protection against mix-up with power bus	
1	U	Motor phase U	Max. 4 mm² Max. output voltage: mains voltage Max. permanent output current: type-dependent
3	W	Motor phase W	
7	V	Motor phase V	
4	BD2	Motor holding brake (reference conductor)	Max. 4 mm²
6	BD1	Motor holding brake	
5	+PTC	Motor temperature monitoring	Max. 4 mm² PTC thermistor (PTC) or thermal contact (NC contact)
8	-PTC		
⏚	PE	PE conductor	Max. 4 mm²

X21 - motor connection - device version E84Dxx**B**...			
Pin	**Connection**	**Description**	**Data**
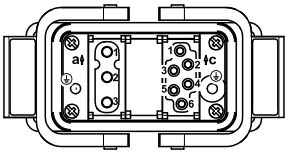 84DWTX0211		Type Modular, sockets Use Lenze system cable: EYP0039xxxxxxxxQ08, 10-core, 1.5 mm² EYP0040xxxxxxxxQ09, 10-core, 2.5 mm²	
a1	U	Motor phase U	Max. 6 mm² Max. output voltage: mains voltage Max. permanent output current: type-dependent
a2	V	Motor phase V	
a3	W	Motor phase W	
c1	+PTC	Motor temperature monitoring	Max. 4 mm² PTC thermistor (PTC) or thermal contact (NC contact)
c6	-PTC		
c2	~	Supply voltage of brake rectifier	Max. 4 mm² V_{rated} = mains voltage-dependent The brake rectifier is mounted in the terminal box of the motor.
c3	~		
c4	S1	Switch for separation on the DC side	
c5	S2		
⏚	PE	PE conductor	Max. 6 mm²

Stop!

Damage of the devices

A defective motor holding brake or a short circuit on the X21 connection (motor and built-on accessories) causes internal damage to the device.

Possible consequences:

► If a defective motor holding brake is connected, the replacement device is also damaged immediately.

Protective measures:

► When devices are replaced due to malfunction of the brake control, ensure that defect-free motor holding brakes are connected.

► Check whether the motor holding brake and the connecting cable are free from defects.

► Replace or repair defective components.

Note!

In the Lenze setting, the temperature monitoring of the motor is activated! To start motors without thermal detectors, the response of the motor temperature monitoring must be deactivated (C00585). Alternatively, a wire jumper between +PTC and -PTC can be used to simulate a normal temperature.

Connection of external brake resistor

X20 - connection of external brake resistor (optional)			
Pin	**Connection**	**Description**	**Data**
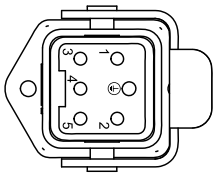 E84DWX0202		Type Q5, sockets	
1	RB2	Brake resistor	max. 2.5 mm^2
2	RB1		
3	T1	only E84DHxxx7524: brake resistor temperature monitoring	
5	T2		
4	n. c.	not assigned	
⏚	PE	PE conductor	

X20 - connection of external brake resistor (optional, - device version E84DxxxxxxxxxxxxxF)			
Pin	**Connection**	**Description**	**Data**
E84DWTXXMO 3		Type Molex, Brad Mini-Change, sockets	
1	RB1	Brake resistor	max. 16 AWG
5	RB2		
3	PE ⏚	PE conductor	
2, 4, 6	n. c.	not assigned	

6.6 Control terminals

6.6.1 Diagnostics

The following can be optionally connected to the X70 diagnostic interface:

- ► USB diagnostic adapter E94AZCUS

  In combination with the Lenze PC software »Engineer«, the diagnostic adapter serves to make comprehensive settings via dialogs, e.g. for initial commissioning.

- ► EZAEBK2001diagnosis terminal

  The diagnosis terminal comprises the keypad including housing and a connecting cable.

  The diagnosis terminal can be used to control or change individual settings. In a quick commissioning menu, the basic settings of the controller can be parameterised using the diagnosis terminal.

The X70 plug is located behind the service hatch. Apply a little pressure to open the service hatch and push the two plastic bars down. Tools are not required.

After using the diagnostic interface, remove the connecting cable at X70 and completely close the service hatch.

X70 - diagnostic interface			
Pin	**Signal**	**Description**	**Data**
8400HLC009		Type RJ69, 10-pole, socket	
1 ... 10	internal	Terminal for diagnosis terminal or diagnostic adapter	

6.6.2 Analog input

The analog input can be used either as voltage input or as current input.

X50- analog inputs AI, AU			
Pin	**Signal**	**Description**	**Data**
84DPSO05_5		Type M12, 5-pole sockets	
1	24O	24 V supply of the external sensors	
2	AI	Current input	0 ... +20 mA 4 ... +20 mA
3	GA	Reference potential	
4	AU	Voltage input	0 ... 10 V
5	Controller	10 V reference voltage (output)	+ 10 V, max. 10 mA

Example circuit

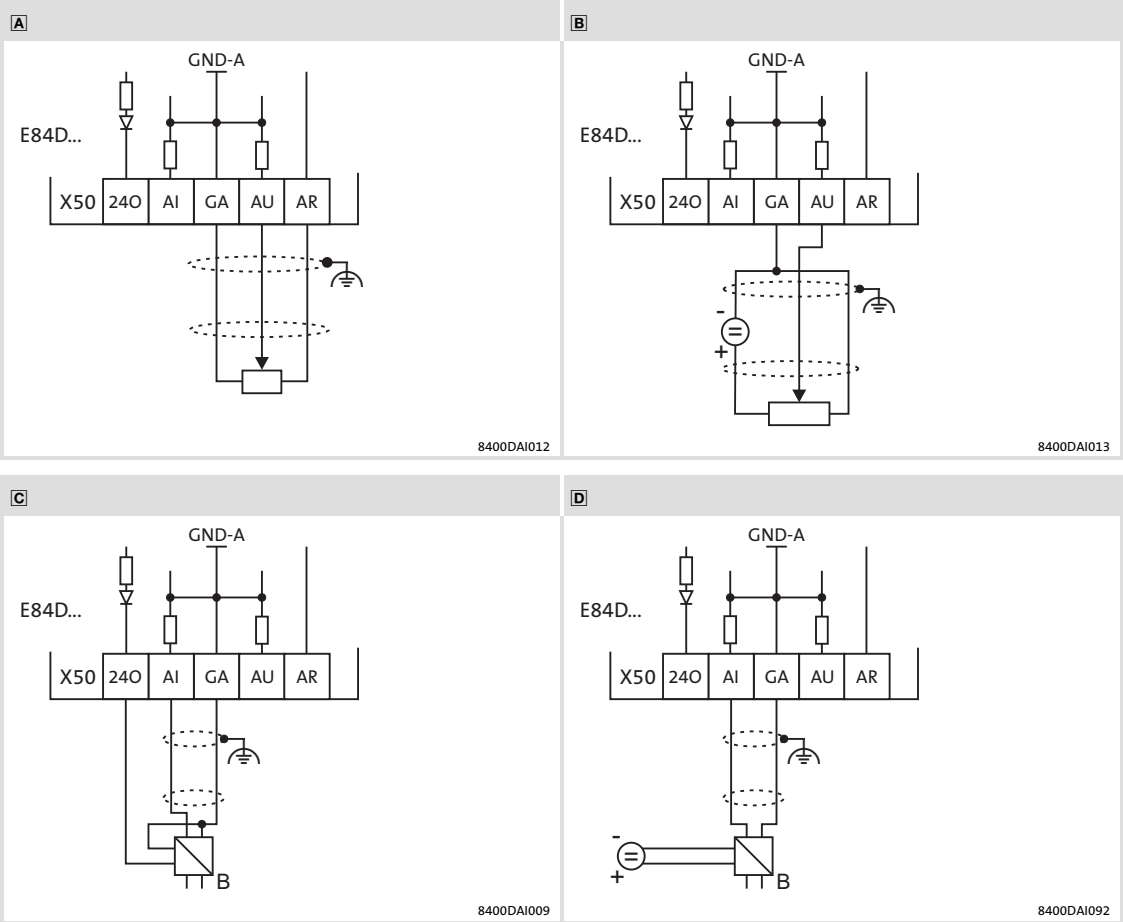

Fig. 6-5 Wiring examples of the analog input

A	Potentiometer with internal reference voltage AR
B	Potentiometer with external reference voltage
C	External master current selection based on a sensor signal 0 - 20 mA.
D	External master current selection based on a sensor signal 0 - 20 mA. External sensor supply.
X50	Connection for analog input
GA	GND-A Ground reference potential for the analog inputs and outputs
⏚	EMC shield connection
U	Measuring device
B	Measuring transducer

6.6.3 Digital inputs and outputs

Note!

The maximum total current of the 24 V voltage supply for external actuators and encoders is 1 A, e.g. ports

- ► Digital inputs/outputs at X4x,
- ► Analog input at X50 or SSI at X80, and
- ► Serial interfaces RS485/RS422 at X81/X82.

Digital inputs

X41 - digital inputs DI1, DI2			
Pin	**Signal**	**Description**	**Data**
84DPSO05_5		Type M12, 5-pole sockets	
1	24O	24 V supply of the external sensors	
2	DI2	Digital input 2	According to IEC61131-2, type 1 or Two-track frequency input for HTL encoder 0 ... 100 kHz
3	GIO	Reference potential	HIGH +15 .... +30 V DC LOW 0 ... +5 V
4	DI1	Digital input 1	8 mA at 24 V DC
5	n. c.	Not assigned	

X42 - digital inputs DI3, DI4			
Pin	**Signal**	**Description**	**Data**
84DPSO05_5		Type M12, 5-pole sockets	
1	24O	24 V supply of the external sensors	
2	DI4 (DO2)	Digital input 4 (also available as digital output)	HIGH +15 .... +30 V DC
3	GIO	Reference potential	LOW 0 ... +5 V
4	DI3 (DO1)	Digital input 3 (also available as digital output)	8 mA at 24 V DC
5	n. c.	Not assigned	

X43 - digital inputs DI5, DI6			
Pin	**Signal**	**Description**	**Data**
84DPSO05_5		Type M12, 5-pole sockets	
1	24O	24 V supply of the external sensors	
2	DI6	digital input 6	according to IEC61131-2, type 1 or Single-track frequency input, 0 ... 7.5 kHz
3	GIO	Reference potential	HIGH +15 .... +30 V DC LOW 0 ... +5 V
4	DI5	digital input 5	8 mA at 24 V DC
5	n. c.	not assigned	

Example circuit

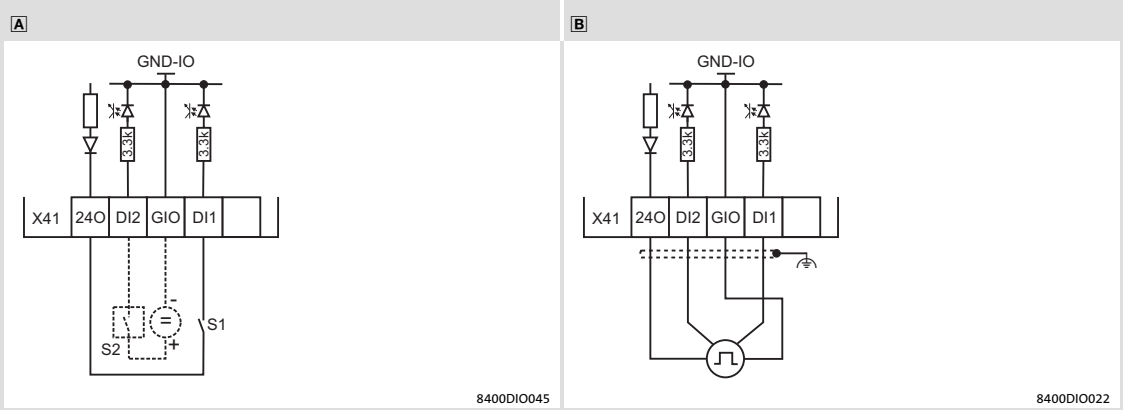

Fig. 6-6 Wiring examples of the digital inputs

A	Wiring of digital inputs, examples:
S1	Potential-free contact, at internal 24 V supply
S2	Signal source, e.g. PLC or with external 24 V supply
B	Connection of an HTL incremental encoder with a maximum input frequency of 100 kHz
	DI1 track A
	DI2 track B
X41	Plugs for digital inputs X41 ... X43
GIO	Ground reference potential for the digital inputs and outputs (GND-IO)

Digital outputs

Note!

If inductive loads are being connected, it is essential to use a spark suppressor at the digital output.

X42 - digital outputs DO1, DO2 (configured digital input!)				
Pin	**Signal**	**Description**	**Data**	
84DPSO05_5		Type M12, 5-pole sockets		
1	24O	24 V supply of the external sensors		
2	DO2	digital output 2 (configured)	HIGH	+24 V or V_{DC} at X10
3	GIO	Reference potential	LOW	0 ... +5 V
4	DO1	digital output 1 (configured)	max. 200 mA per output	
5	n. c.	Not assigned		

Example circuit

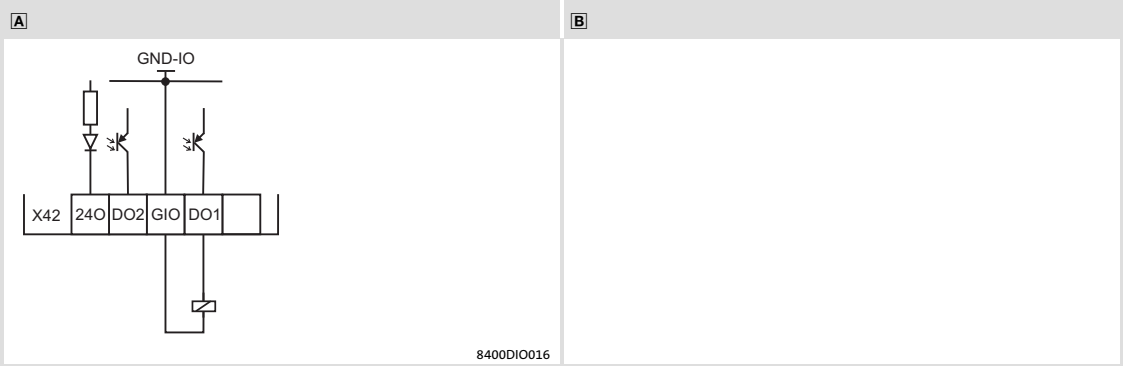

Fig. 6-7 Wiring examples of the digital inputs and outputs

A	Digital control (relay, valve, ...) with internal 24 V supply
B	-
X42	Plug for the digital outputs (configured)
GIO	Ground reference potential for the digital inputs and outputs (GND-IO)

6.6.4 Synchronous serial interface (SSI)

X80 - SSI			
Pin	**Signal**	**Description**	**Data**
84DPSO05_8		M12 type, 8-pole sockets	
1	CLK+	Pos. clock signal	
2	CLK-	Neg. clock signal	
3	Data+	Pos. data line	
4	Data-	Neg. data line	
5	n. c.	Not assigned	-
6	n. c.	Not assigned	-
7	GIO	Reference potential	External supply at 24E: Voltage drop < 2.5 V Total current for X4x, X50/X8x: 1 A
8	24O	24 V supply of the external SSI encoders	

6.7 Communication

Carry out the installation in accordance with the mounting directives of the fieldbus systems in order to prevent a faulty communication. Please observe the notes on the additional equipotential bonding.

Stop!

High compensation currents

High compensation currents can flow via the shield of the fieldbus cable.

Possible consequences:

Damage to material assets or failures

Protective measures:

Prevent compensation currents via the shield of the fieldbus cable as follows:

- ► Connect all fieldbus nodes with a 16 mm^2 cable via the earthing studs.
- ► Lay this cable in parallel to the bus cable.
- ► Ensure a highly conductive connection of all earthing studs with a copper braid cable to the mounting surface.

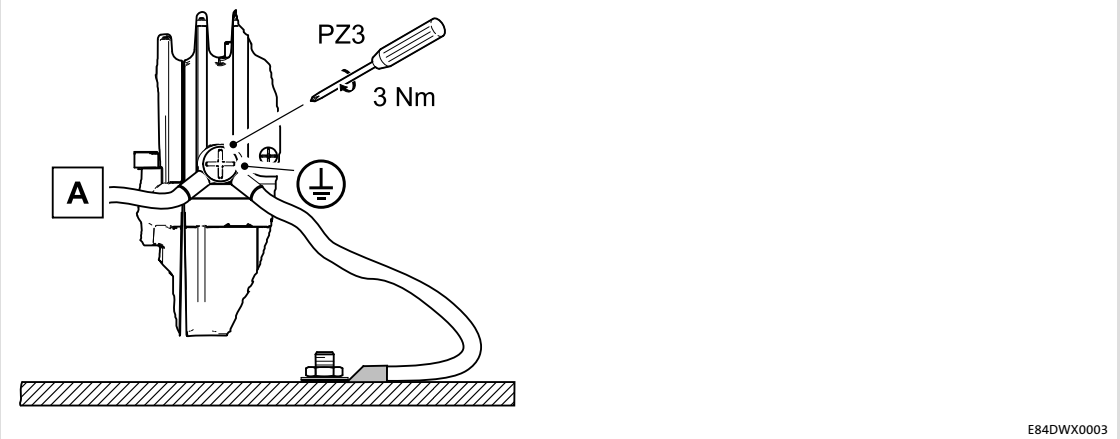

⏚ Earthing for compliance with EMC conditions, prevents compensation currents via the shield of the fieldbus cable

A 16 mm^2 equalizing conductor with ring cable lug M6

The communication cables of the available fieldbus systems can be installed using different plug versions. The type code provides information on the design of one device.

6.7.1 PROFINET® / EtherNet/IP™

Push-pull plug

X31 - fieldbus input, X32 fieldbus output			
Pin	**Signal**	**Description**	**Data**
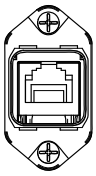 84DWTX0311		AIDA standard, type RJ45, socket, 8-pole	
1	Tx+	Transmit path + (transmit)	
2	Tx-	Transmit path - (transmit)	
3	Rx+	Receive path + (receive)	
4	res.	-	
5	res.		
6	Rx-	Receive path - (receive)	
7	res.	-	
8	res.		

M12 plug, 4-pole

X3x - communication			
Pin	**Signal**	**Description**	**Data**
84DPSO05_5		Type M12, 4-pole, D-coded X31 -> sockets X32 -> sockets	
1	Tx+	Transmit path +	
2	Rx+	Receive path +	
3	Tx-	Transmit path -	
4	Rx-	Receive path -	

6.7.2 PROFIBUS®

X3x - communication			
Pin	**Signal**	**Description**	**Data**
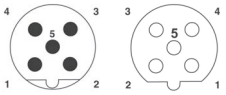 84DPSO05_5		Type M12, 5-pole, B-coded X31 -> input -> pins X32 -> output -> sockets	
1	P5V2	● Only assigned at the output	5 V DC / 30 mA (bus termination)
2	RxD/TxD-N	Data line A (received/transmitted data, minus)	
3	M5V2	Data ground (ground to 5 V)	
4	RxD/TxD-P	Data line B (received/transmitted data, plus)	
5	n. c.	- (shield connection above the housing)	

The station address can be set via DIP switches 1 ... 64 behind the service hatch.

6.7.3 CANopen®

X3x - communication			
Pin	**Signal**	**Description**	**Data**
84DPSO05_5		Type: M12, 5-pole, A-coded X31 -> pins X32 -> sockets	
1	n. c.	Not assigned	CAN specification
2	n. c.	Not assigned	
3	CG	CAN-Ground	
4	CH	CAN-HIGH	
5	CL	CAN-LOW	

Example circuit

Wiring example

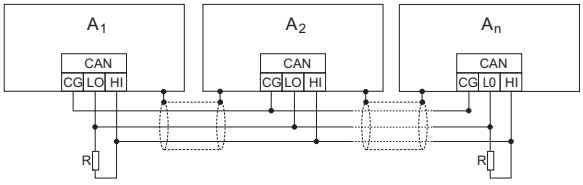

Terminating resistors of 120 Ω are not integrated and must be wired externally.

6.7.4 CAN on board

X35 - communication			
Pin	**Signal**	**Description**	**Data**
84DPSO05_5		Type: M12, 5-pole, A-coded, sockets	
1	n. c.	Not assigned	CAN specification From HW version VD onwards, the 120 Ω terminating resistor is integrated. HW version: see C00210/10
2	n. c.	Not assigned	
3	CG	CAN-Ground	
4	CH	CAN-HIGH	
5	CL	CAN-LOW	

Software manual for the standard device / »Engineer« online help

Here, detailed information is provided about ...

► CAN communication;

► Parameter setting and configuration;

► System bus (CAN) diagnostics.

6.8 Safety engineering

Please observe the following safety instructions and application notes to preserve the certified safety engineering features and to ensure trouble-free and safe operation.

Danger!

Danger to life through improper installation

Improper installation of safety engineering systems can cause an uncontrolled starting action of the drives.

Possible consequences:

► Death or severe injuries

Protective measures:

► Safety engineering systems may only be installed and commissioned by qualified and skilled personnel.

► All control components (switches, relays, PLC, ...) and the control cabinet must comply with the requirements of ISO 138491 and ISO 13849-2. This includes i.a.:
– Switches, relays with at least IP54 enclosure.
– Control cabinet with at least IP54 enclosure.
– Please refer to ISO 138491 and ISO 13849-2 for all further requirements.

► Wiring must be shielded.

► All safety relevant cables outside the control cabinet must be protected, e.g. by means of a cable duct:
– Ensure that no short circuits can occur.
– For further measures see EN ISO 13849-2.

► If an external force acts upon the drive axes, additional brakes are required. Please observe that hanging loads are subject to the force of gravity!

Danger!

Danger to life by improper installation

Improper installation of the safety equipment may cause an uncontrolled start of the drives.

Possible consequences:

► Death or severe injury

Protective measures:

Shield the cables between the plugs for the safety equipment and the connected components (e.g. sensors, devices, ...).

Note!

Please observe during transport, storage and operation:

► Cover unused connectors for control connections and interfaces with the plastic covers provided to preserve the certified safety technology features.

X61 - connection of safety system ”Safety Option 10”			
Pin	**Connection**	**Description**	**Data**
84DPSO05_5		M12, 5-pole pins, A-coded	
1	SIA	Safe input, channel A	I_{typ} = 45 mA LOW: -3 ... 5 V HIGH: 18 ... 30 V Supply through safely separated power supply unit (SELV/PELV).
2	SIB	Safe input, channel, B	
5	GI	1. GND potential for SIA/SIB 2. GND potential for the non-safe signalling output	
4	24O	24-V voltage supply for the non-safe signalling output	24 V, max. 0.2 A short-circuit-proof Supply through safely separated power supply unit (SELV/PELV).
3	DO1	Non-safe signalling output: ”SafeTorqueOff” with 2-channel request by SIA **and** SIB	High active

X62 - connection of safety engineering system ”Safety Option 30”			
Pin	**Connection**	**Description**	**Data**
84DPSO05_5		M12, 5-pole sockets, A-coded	
1	AIE	Error acknowledgement	
2	24_ACK	24-V supply voltage for reset button	max. 300 mA
3	AIS	Restart acknowledgement	
4	GND_SM	GND potential	
5	GND_SM		

X63 - connection of the ”Safety Option 30” safety engineering system			
Pin	**Connection**	**Description**	**Data**
84DSO05_8		M12, sockets 8-pole, A-coded	
1	CLA	Clock output, channel A	
2	CLB	Clock output, channel B	
3	GND_CLK	GND potential - clock output, channel A	
4	I1A	Safe input 1, channel A	
5	GND_I1	GND potential - input 1, channel A	
6	I1B	Safe input 1, channel B	
7	GND_CLK	GND potential - clock output, channel B	
8	GND_I1	GND potential - input 1, channel B	

X64 - connection of the ”Safety Option 30” safety engineering system			
Pin	**Connection**	**Description**	**Data**
84DSO05_8		M12, sockets 8-pole, A-coded	
1	CLA	Clock output, channel A	
2	CLB	Clock output, channel B	
3	GND_CLK	GND potential - clock output, channel A	
4	I2A	Safe input 2, channel A	
5	GND_I2	GND potential - input 2, channel A	
6	I2B	Safe input 2, channel B	
7	GND_CLK	GND potential - clock output, channel B	
8	GND_I2	GND potential - input 2, channel B	

7 Electrical installation - EMS version

7.1 Important notes

Danger!

Dangerous electrical voltage

All power terminals remain live for up to three minutes after mains disconnection.

Possible consequences:

► Death or severe injuries when touching the power terminals.

Protective measures:

► Switch off the power supply and wait for at least three minutes before working on the power terminals.

► Make sure that all power terminals are deenergised.

Danger!

► The contacts of the power connectors **X10, X11, X20 and X21** may carry dangerous voltage if the frequency inverter is connected to the mains. Thus, deenergise the frequency inverter before working on it.

► Earth the device by means of X10 and by connecting it to functional earth (earthing bolt) in order to prevent injury to persons and malfunctioning.

Danger!

Dangerous voltage

The leakage current to earth (PE) is > 3.5 mA AC or > 10 mA DC.

Possible consequences:

► Death or severe injuries when the device is touched in the event of a fault.

Protective measures:

► Implement the actions required in the EN 61800-5-1. Especially:
- Fixed installation
- PE connection must conform to standards (PE conductor diameter $\geq 10\ mm^2$ or PE conductor must be connected twice)

Stop!

No device protection if the mains voltage is too high

The mains input is not internally fused.

Possible consequences:

► Destruction of the device if the mains voltage is too high.

Protective measures:

► Observe the maximally permissible mains voltage.

► Fuse the device correctly on the supply side against mains fluctuations and voltage peaks.

Stop!

The device contains components that can be destroyed by electrostatic discharge!

Before working on the device, the personnel must ensure that they are free of electrostatic charge by using appropriate measures.

Stop!

Pluggable terminal strips or plug connections

Plugging or removing the terminal strips or plug connections during operation may cause high voltages and arcing.

Possible consequences:

► Damage of the devices

Protective measures:

► Switch off device.

► Only plug or remove the terminal strips or plug connections in deenergised status.

Note!

Switching on the controller motor side is permissible for safety shutdown (emergency stop) and for operation of several motors on the controller in V/f operating mode.

Please observe the following:

► When switching with the controller is enabled, you can activate monitoring functions of the controller. If no monitoring function is activated, switching is permissible.

► The switching elements at the motor end must be rated for DC voltages V_{DCmax} = 800 V.

Note!

Only with the **control element**

► **C** = service switch with protective function

the device can be disconnected from the mains voltage.

Note!

The counter plugs of the power terminals must be equipped with connector housings with a vertical outgoing cable.

Note!

► **It is absolutely necessary to keep the plastic caps on the connectors for the control terminals and interfaces!**

► During transport, storage, and operation, ports not used must be sealed using the plastic caps, in order to maintain the product features in accordance with the technical data.

► Only if this note is observed, the product features certified are ensured for devices with a safety system.

EMC-compliant wiring

Note!

► Establish a good conductive connection to protective earth by means of a copper-braid cable (e.g. mounting surface, machine earth or building earth).

► Lay control cables and data lines separately from the motor cables.

► Connect the shields of the control cables and data lines **at both ends**.

7.1.1 Electrical isolation

The protective insulation of the ”8400 Inverter Drives” controllers is implemented according to EN 61800-5-1. The following illustration shows the insulation concept.

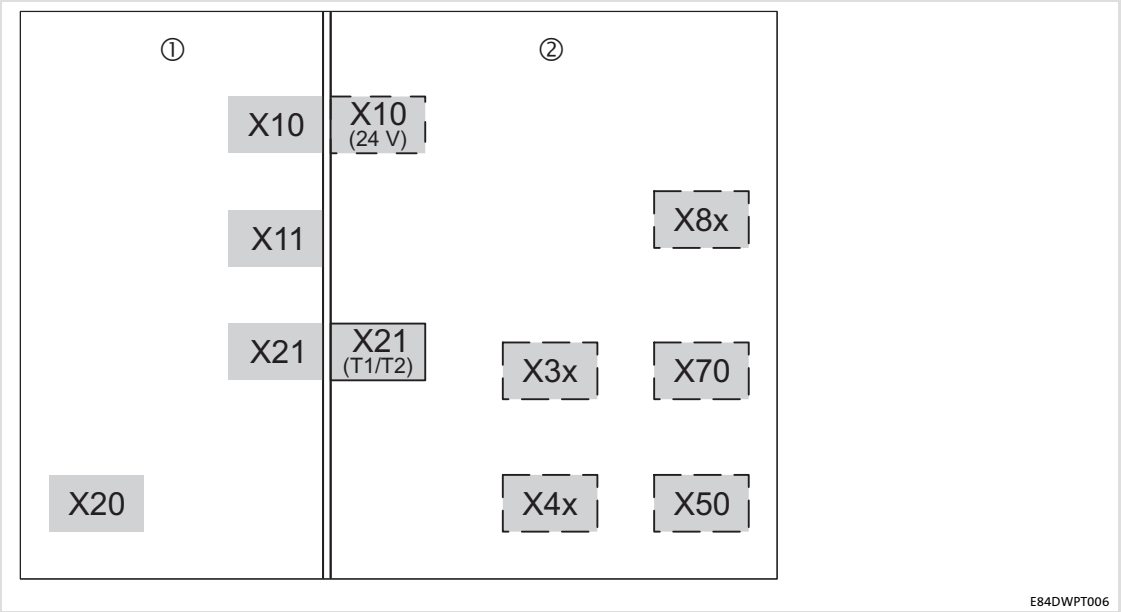

Fig. 7-1 Electrical isolation between power terminals, control terminals and housing

⋮	Isolation by functional insulation
I	Isolation by basic insulation
II	Safe isolation by double or reinforced insulation Protection against accidental contact is guaranteed without any further measures.
①	Power terminals
X10, X11	Mains
X21	Motor
X20	Brake resistor
②	Control terminals
X10 (24 V)	24 V supply voltage for the motor holding brake
X21 (T1/T2)	Motor temperature monitoring
X3x	Fieldbus communication, CAnopen Master PLC
X4x	Digital inputs/outputs
X50	Analog input
X70	Diagnostics
X8x	SSI, RS485/422

7.1.2 Device protection

- ► In case of condensation, do not connect the controller to the mains voltage before the moisture has evaporated completely.
- ► The controller must be protected by external fuses.
- ► Unused control inputs and outputs must be closed according to the intended type of protection.

7.1.3 Maximum motor cable length

- Keep the motor cable as short as possible since this has a positive effect on the drive behaviour.
- The maximally permissible motor cable length is: 20 m, shielded
  - at rated mains voltage
  - at a switching frequency of 8 kHz

Note!
If the conditions for electromagnetic compatibility must be observed, the permissible cable lengths may vary.

7.1.4 Motor protection

- Extensive protection against overload:
  - By overcurrent relays or temperature monitoring.
  - We recommend the use of PTC thermistors or thermostats to monitor the motor temperature.
  - PTC thermistors or thermostats can be connected to the controller.
  - For monitoring the motor, we recommend the use of the I^2xt monitoring.
- Only use motors with an insulation suitable for the inverter operation:
  - Insulation resistance: min. $\hat{u}$ = 1.5 kV, min. du/dt = 5 kV/µs
  - When using motors with an unknown insulation resistance, please contact your motor supplier.

7.2 Safety instructions for the installation according to U_L or U_R

Original - English

Warnings!

- Branch circuit protection:
  Suitable for use on a circuit capable of delivering not more than 200 000 rms symmetrical amperes, 500 V maximum.
  – When Protected by CC, T, or J Class Fuses.
- Integral solid state protection does not provide branch circuit protection. Branch circuit protection must be provided in accordance with the National Electrical Code and any additional local codes.
- Overload Protection = 125 % of rated FLA.
- Use 75 °C copper wire only, except for control circuits.
- Use Class 1 wire only.
- Enclosed Device, suitable for use in a UL Type 4X (Indoor) Environment.
- Suitable for use in a surrounding air temperature of 45 °C, and
  – additionally 55 °C when de-rating rules are followed.
- Suitable for use in a compartment handling conditioned air.
- The device is provided with internal overload protection. For information on the protection level of the internal overload protection for a motor load, see the corresponding Software Manual or Online Help under the topic ”Motor load monitoring (I^2xt)”. This function has to be activated; i. e. the reaction must be changed from ”Warning” (factory setting) to ”Fault”.
- For information on rating and proper connection of the thermal protector (only for connection to motors having integral thermal protection), see the corresponding Manual or Online Help.

Warnings!

The opening of branch-circuit protective device may be an indication that a fault has been interrupted.

To reduce the risk of fire or electric shock, current-carrying parts and other components of the controller should be examined and replaced if damaged or equivalent.

7.3 Safety instructions for the installation according to U_L or U_R

Original - French

Warnings!

- ► Branch circuit protection:
  Suitable for use on a circuit capable of delivering not more than 200 000 rms symmetrical amperes, 500 V maximum.
  – When Protected by CC, T, or J Class Fuses.
- ► Integral solid state protection does not provide branch circuit protection. Branch circuit protection must be provided in accordance with the National Electrical Code and any additional local codes.
- ► Overload Protection = 125 % of rated FLA.
- ► Use 75 °C copper wire only, except for control circuits.
- ► Use Class 1 wire only.
- ► Enclosed Device, suitable for use in a UL Type 4X (Indoor) Environment.
- ► Suitable for use in a surrounding air temperature of 45 °C, and
  – additionally 55 °C when de-rating rules are followed.
- ► Suitable for use in a compartment handling conditioned air.
- ► The device is provided with internal overload protection. For information on the protection level of the internal overload protection for a motor load, see the corresponding Software Manual or Online Help under the topic ”Motor load monitoring (I^2xt)”. This function has to be activated; i. e. the reaction must be changed from ”Warning” (factory setting) to ”Fault”.
- ► For information on rating and proper connection of the thermal protector (only for connection to motors having integral thermal protection), see the corresponding Manual or Online Help.

Warnings!

The opening of branch-circuit protective device may be an indication that a fault has been interrupted.

To reduce the risk of fire or electric shock, current-carrying parts and other components of the controller should be examined and replaced if damaged or equivalent.

7.4 Installation according to EMC (installation of a CE-typical drive system)

Design of the cables

- ► It is imperative to comply with the regulations concerning minimum cross-sections of PE conductors. The cross-section of the PE conductor must be at least as large as the cross-section of the power connections.
- ► The cables used must comply with the approvals required for the location (e.g. UL).

7.4.1 Shielding

Requirements

- ► The effectiveness of a shielded cable is reached by:
  - – Providing a good shield connection through large-surface shield contact.
  - – Using only braided shields with low shield resistance made of tin-plated or nickel-plated copper braid.
  - – Using braided shields with an overlap rate > 70 % and an overlap angle of 90 °.
  - – Keeping unshielded cable ends as short as possible.

Use system cables or shielded cables for these connections:

- ► Motor
- ► External brake resistor (Mounting Instructions of the brake resistor)
- ► Motor holding brake (shielding is required when being integrated into the motor cable; connection to optional motor brake control)
- ► Motor temperature monitoring
- ► Fieldbus communication (e.g. CANopen)
- ► Serial interfaces (e.g. SSI, RS485/422)

The following connections need not be shielded:

- ► Mains
- ► 24 V supply for motor holding brakes
- ► Digital signals (inputs and outputs). From a cable length of approx. 5 m onwards, we recommend to use shielded cables.

Connection system

- ► Directly apply the shielding in the plug.
  - – Extensively apply the shielding and ensure electrical conductivity.
  - – If required, additionally connect the shield to the cable clamp rail.

7.4.2 Motor cable

- ► Only use shielded motor cables with braids made of tinned or nickel-plated copper. Shields made of steel braids are not suitable.
  - – The overlap rate of the braid must be at least 70 % with an overlap angle of 90 °.
- ► The cables used must correspond to the requirements at the location (e.g. EN 60204-1).
- ► Use Lenze system cables.
- ► Extensively apply the shielding in the plug and attach it in a way which ensures electrical conductivity.
- ► The motor cable is optimally installed if
  - – it is separated from mains cables and control cables,
  - – it only crosses mains cables and control cables at right angles,
  - – it is not interrupted.
- ► If the motor cable must be opened all the same (e.g. due to chokes, contactors, or terminals):
  - – The unshielded cable ends may not be longer than 100 mm (depending on the cable cross-section).
  - – Install chokes, contactors, terminals etc. spatially separated from other components (with a min. distance of 100 mm).
  - – Install the shield of the motor cable directly before and behind the point of separation to the mounting plate with a large surface.
- ► Connect the shield with a large surface to PE in the terminal box of the motor at the motor housing.
  - – Metal EMC cable glands at the motor terminal box ensure a large surface connection of the shield with the motor housing.

7.4.3 Control cables

- Control cables must be shielded to minimise interference injections.
- For lengths of 200 mm and more, use only shielded cables for analog and digital inputs and outputs. Under 200 mm, unshielded but twisted cables may be used.
- Connect the shield correctly:
  - The shield connections of the control cables must be at a distance of at least 50 mm from the shield connections of the motor cables and DC cables.
  - Connect the shield of digital input and output cables at both ends.
  - Connect the shield of analog input and output cables at one end (at the drive controller).
- To achieve an optimum shielding effect (in case of very long cables, with high interference) one shield end of analog input and output cables can be connected to PE potential via a capacitor (e.g. 10 nF/250 V) (see sketch).

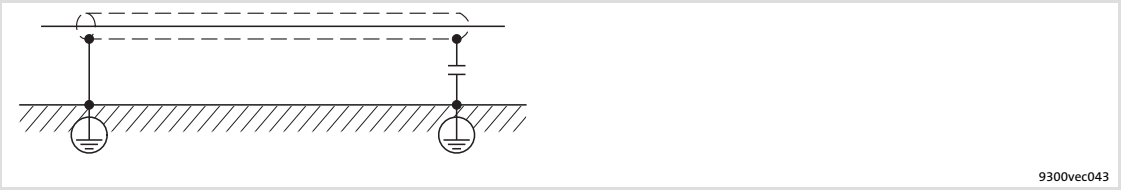

Fig. 7-2 Shielding of long, analog control cables

7.4.4 Wiring

Notes on the laying of cables:

- ► In the case of greater cable lengths, a greater cable distance between the cables is required.
- ► In the case of parallel routing (cable trays) of cables with different types of signals, the degree of interference can be minimised by using a metallic cable separator or isolated cable ducts.

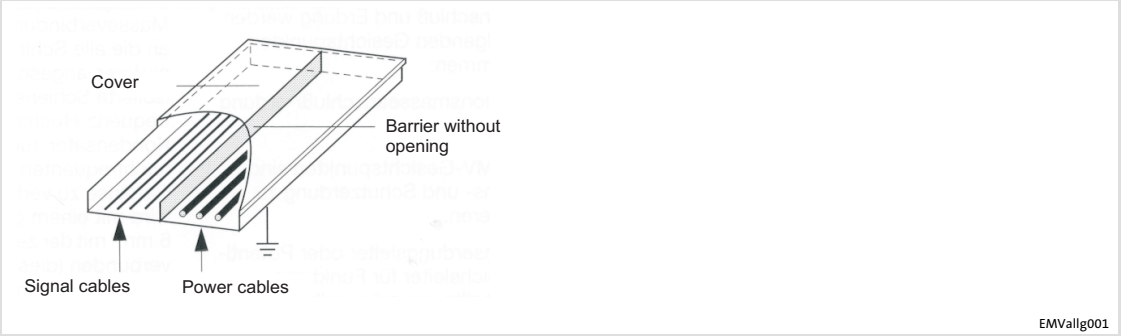

Fig. 7-3 Cable routing in the cable duct with barrier

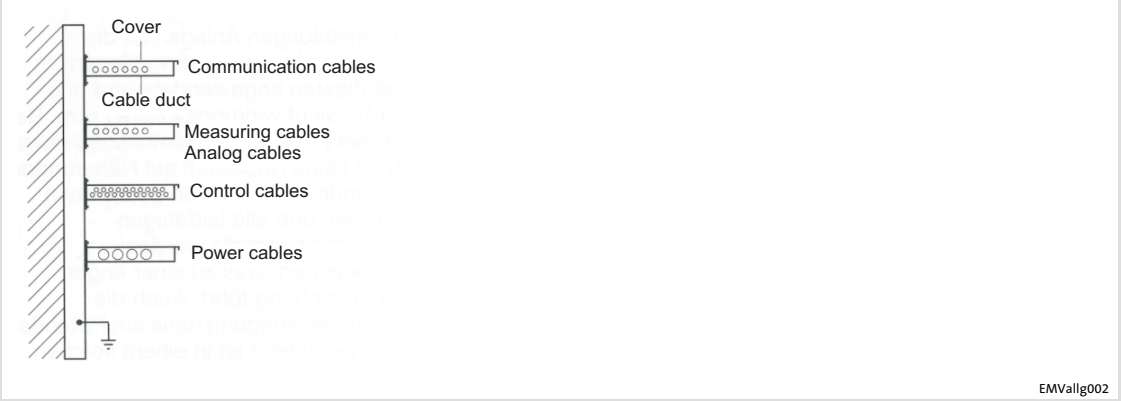

Fig. 7-4 Cable routing in separated cable ducts

Wiring on the mains side

- ► It is possible to connect the controller, mains choke or RFI filter to the mains via single cores or unshielded cables.
- ► The cable cross-section must be rated for the assigned fuse protection (VDE 0160).

Wiring on the motor side

Stop!

The motor cable is highly susceptible to interference. Therefore you will achieve an optimum wiring on the motor side if you

- ► exclusively use shielded and low-capacitance motor cables.
- ► do **not** integrate any further cable into the motor cable (e.g. for blowers etc.).
- ► shield the supply cable for temperature monitoring of the motor (PTC or thermostat) and install it separately from the motor cable.

Special conditions allow you to integrate the supply cable for temperature monitoring of the motor into the motor cable: (📖 114)

Danger!

Uncontrolled motor movements can occur

If the motor cable is damaged, a short circuit between the brake control cables and the motor cables can cause motor movements with low torque.

Possible consequences:

- ► Personnel in the vicinity of the motor can be injured.

Protective measures:

- ► Install motor cable in a protected way (e.g. in a cable duct).

7.4.5 Detecting and eliminating EMC interferences

Fault	Cause	Remedy
Interferences of analog setpoints of your own or other devices and measuring systems	Unshielded motor cable	Use shielded motor cable
	Shield contact is not extensive enough	Carry out optimal shielding as specified
	Shield of the motor cable is interrupted by terminal strips, switched, etc.	● Separate components from other component part with a minimum distance of 100 mm ● Use motor choke/motor filter
	Install additional unshielded cables inside the motor cable (e.g. for motor temperature monitoring)	Install and shield additional cables separately
	Too long and unshielded cable ends of the motor cable	Shorten unshielded cable ends to maximally 40 mm

7.5 Devices in a power range of 0.75 ... 4 kW (3/PE AC 400 V)

7.5.1 Example circuits

Half wave / half wave coded

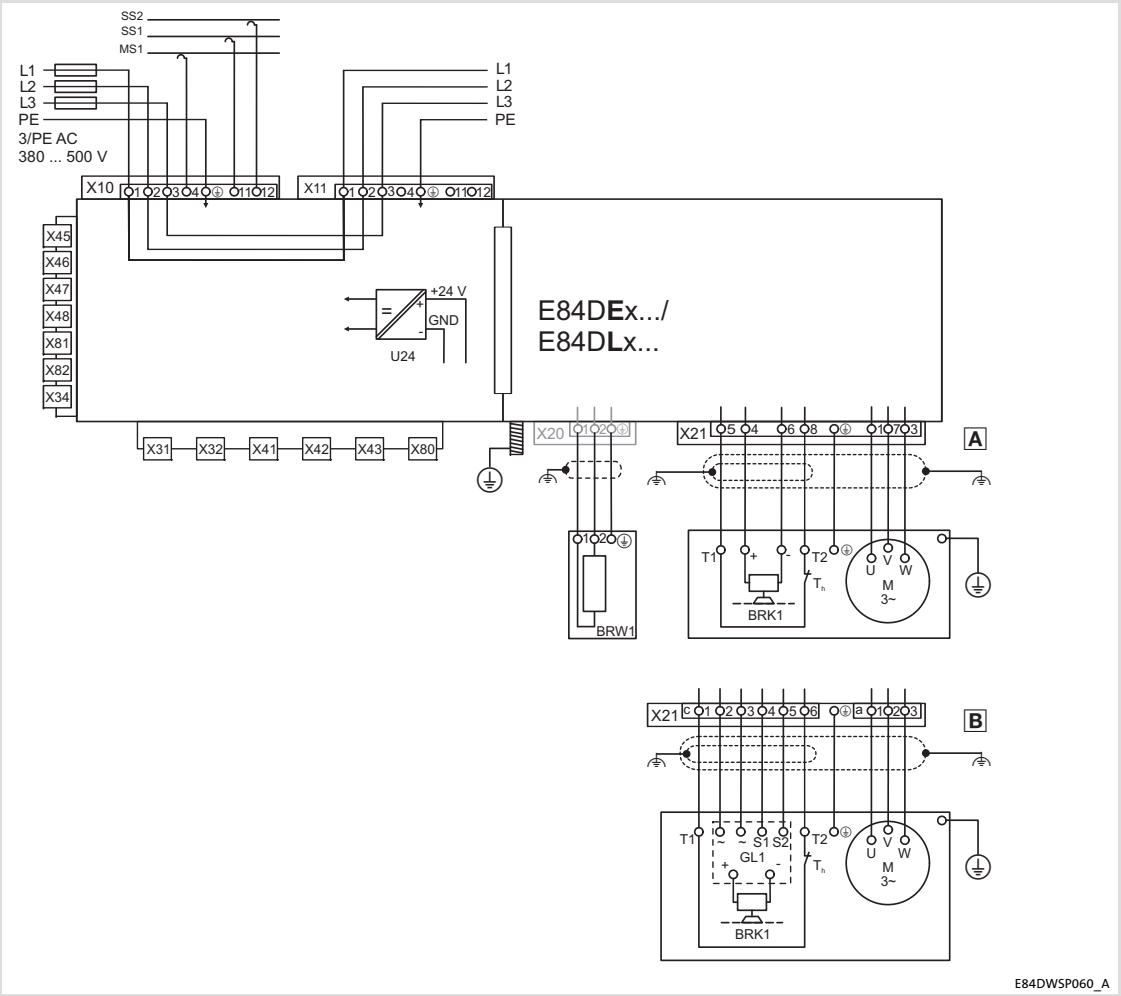

E84D**E**x... / E84D**L**x...	8400 protec EMS controller, half wave / half wave coded
X10: L1, L2, L3, PE	Mains voltage
X10: SS1, SS2, MS1	EMS: control bars, signalling bars
X11	Mains voltage loop-through technique (optional)
X31 ... X32	Fieldbus communication
X34	CANopen master PLC
X41 ... X43	DIO
X45 ... X48	EMS: Further DIO
X80	SSI
X81/X82	EMS: RS485/422
M	Motor
A	Motor connection system: Plug type Q8/0
B	Motor connection system: Plug type Modular
T_h	PTC thermistor (PTC) or thermal contact (NC contact)
BRK1	Spring-applied brake
GL1	Spring-applied brake control
BRW1	External brake resistor at the optional terminal X20
U24	Supply voltage 24 V internal

Power wave / DECA bus

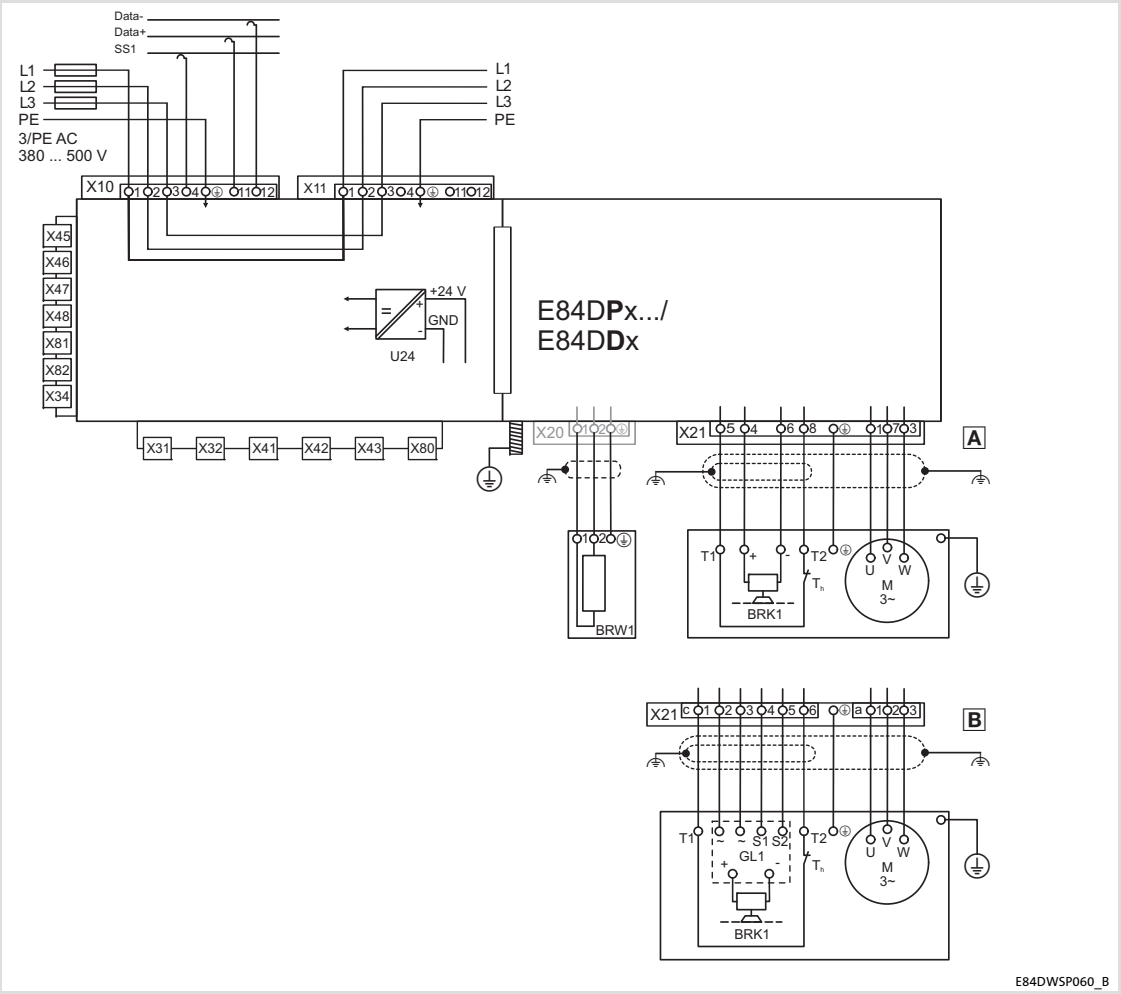

E84D**P**x... / E84D**D**x...	8400 protec EMS controller, power wave / DECA bus
X10: L1, L2, L3, PE	Mains voltage
X10: data±, SS1	EMS: Signalling bars, control bars
X11	Mains voltage loop-through technique (optional)
X31 ... X32	Fieldbus communication
X34	CANopen master PLC
X41 ... X43	DIO
X45 ... X48	EMS: Further DIO
X80	SSI
X81/X82	EMS: RS485/422
M	Motor
A	Motor connection system: Plug type Q8/0
B	Motor connection system: Plug type Modular
T_h	PTC thermistor (PTC) or thermal contact (NC contact)
BRK1	Spring-applied brake
GL1	Spring-applied brake control
BRW1	External brake resistor at the optional terminal X20
U24	Supply voltage 24 V internal

Inductive

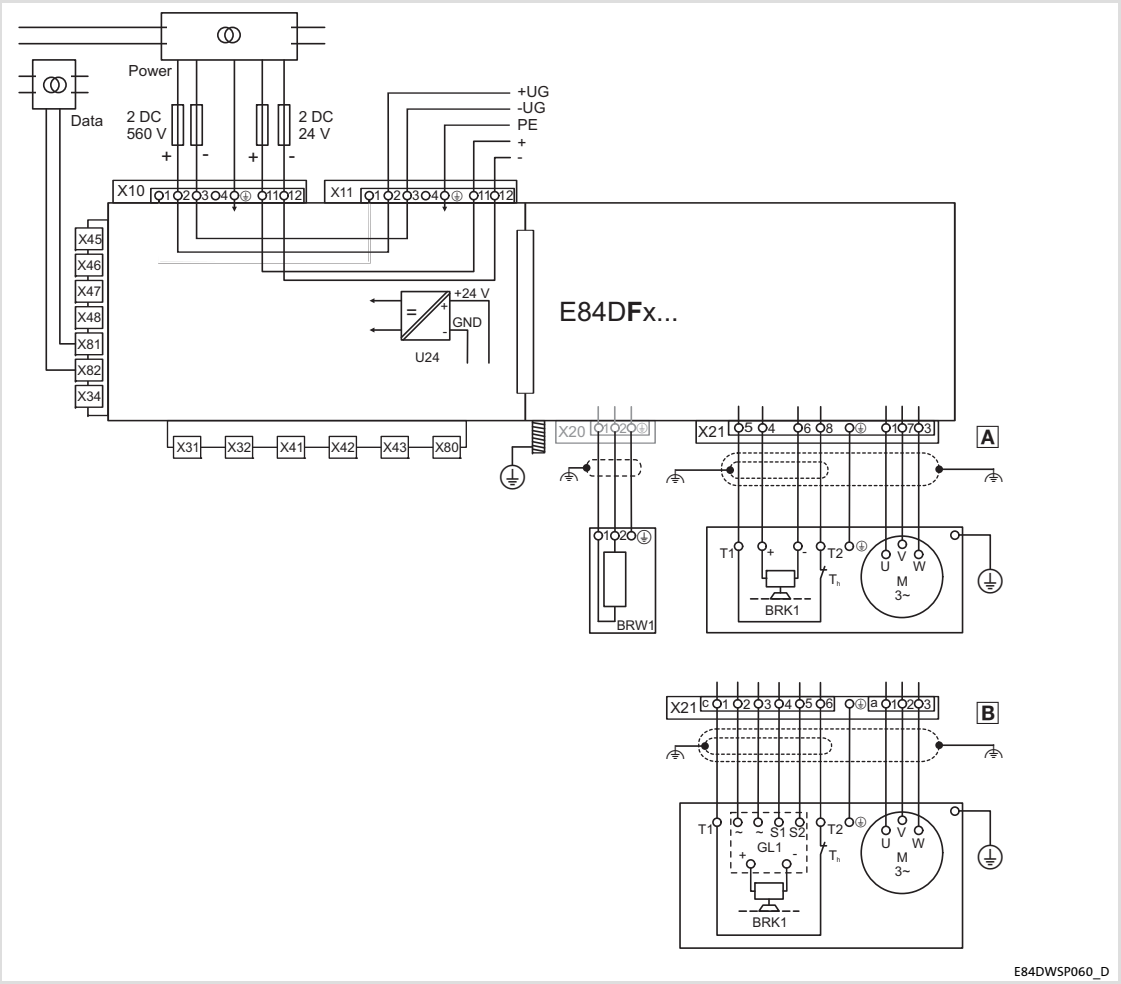

E84DFx...	8400 protec EMS controller, inductive system
X10: +UG, -UG, PE	560 V DC (mains voltage)
X10: +, -	24 V DC (motor holding brake)
X11	Mains voltage loop-through technique (optional)
X31 ... X32	Fieldbus communication
X34	CANopen master PLC
X41 ... X43	DIO
X45 ... X48	EMS: Further DIO
X80	SSI
X81/X82	EMS: RS485/422
M	Motor
A	Motor connection system: Plug type Q8/0
B	Motor connection system: Plug type Modular
T_h	PTC thermistor (PTC) or thermal contact (NC contact)
BRK1	Spring-applied brake
GL1	Spring-applied brake control
BRW1	External brake resistor at the optional terminal X20
U24	Supply voltage 24 V internal

7.5.2 Terminal assignment of the power connections

Mains connection

X10 - port for mains, signalling bar, and control bar			
Pin	**Connection**	**Description**	**Data**
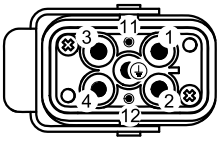 84DWTX0100		DESINA type Q4/2, pins	Version: 8400 protec EMS Type designation: ● E84D**Ex**... (half wave) ● E84D**Lx**... (half wave coded)
1	L1	Mains phase L1	Max. 6 mm²
2	L2	Mains phase L2	
3	L3	Mains phase L3	
4	MS1	Signalling bar 1	
⏚	PE	PE conductor	
11	SS1	Control bar 1 (Half wave/half wave coded)	Max. 2.5 mm²
12	SS2	Control bar 2 (half wave optional)	

X10 - port for mains, power wave / DECA and control bar			
Pin	**Connection**	**Description**	**Data**
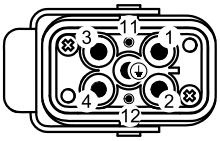 84DWTX0100		DESINA type Q4/2, pins	Version: 8400 protec EMS Type designation: ● E84D**Px**... (power wave) ● E84D**Dx**... (DECA bus)
1	L1	Mains phase L1	Max. 6 mm²
2	L2	Mains phase L2	
3	L3	Mains phase L3	
4	SS1	Control bar 1	
⏚	PE	PE conductor	
11	Data+	PW+ / DECA+	Max. 2.5 mm²
12	Data-	/ DECA-	

X10 - port for DC supply			
Pin	**Connection**	**Description**	**Data**
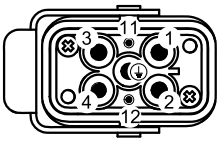 84DWTX0100		DESINA type Q4/2, pins	Version: 8400 protec EMS Type designation: ● E84D**Fx**... (inductive)
1	n. c.	Not assigned	Max. 6 mm²
2	+UG	DC-bus voltage +	
3	-UG	DC-bus voltage -	
4	n. c.	Not assigned	
⏚	PE	PE conductor	
11	+	External supply voltage for motor holding brake 24 V DC	Max. 2.5 mm²
12	-	External reference potential 24 V DC	

X11 - port for mains loop-through technique (optional)			
Pin	**Connection**	**Description**	**Data**
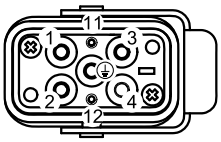 84DWTX0110		DESINA type Q4/2, sockets	Version: 8400 protec EMS Type designation: ● E84D**EM**... (half wave) ● E84D**LM**... (half wave coded) ● E84D**PM**... (power wave) ● E84D**DM**... (DECA bus)
1	L1	Mains phase L1	Max. 6 mm²
2	L2	Mains phase L2	
3	L3	Mains phase L3	
4	n. c.	Not assigned	
⏚	PE	PE conductor	
11	n. c.	Not assigned	Max. 2.5 mm²
12	n. c.	Not assigned	

X11 - port for loop-through technique DC supply (optional)			
Pin	**Connection**	**Description**	**Data**
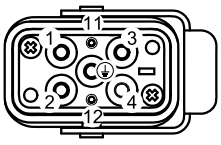 84DWTX0110		DESINA type Q4/2, sockets	Version: 8400 protec EMS Type designation: ● E84D**FM**... (inductive)
1	n. c.	Not assigned	Max. 6 mm²
2	+UG	DC-bus voltage +	
3	-UG	DC-bus voltage -	
4	n. c.	Not assigned	
⏚	PE	PE conductor	
11	+	External supply voltage for motor holding brake 24 V DC	Max. 2.5 mm²
12	-	External reference potential 24 V DC	

Motor connection

X21 - motor connection - device version E84DxxC...			
Pin	**Connection**	**Description**	**Data**
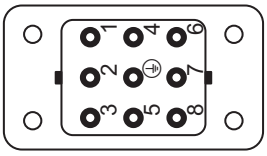 84DWTX0210		Type Q8/0, sockets Use Lenze system cable: EYP0037xxxxxxxxQ10, 8-core, 1.5 mm² EYP0038xxxxxxxxQ11, 8 core, 2.5 mm²	
2	n. c.	Grooved pin as a protection against mix-up with power bus	
1	U	Motor phase U	Max. 4 mm² Max. output voltage: mains voltage Max. permanent output current: type-dependent
3	W	Motor phase W	
7	V	Motor phase V	
4	BD2	Motor holding brake (reference conductor)	Max. 4 mm²
6	BD1	Motor holding brake	
5	+PTC	Motor temperature monitoring	Max. 4 mm² PTC thermistor (PTC) or thermal contact (NC contact)
8	-PTC		
⏚	PE	PE conductor	Max. 4 mm²

X21 - motor connection - device version E84DxxB...			
Pin	**Connection**	**Description**	**Data**
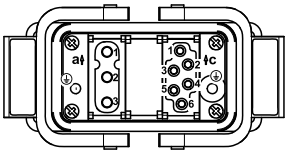 84DWTX0211		Type Modular, sockets Use Lenze system cable: EYP0039xxxxxxxxQ08, 10-core, 1.5 mm² EYP0040xxxxxxxxQ09, 10-core, 2.5 mm²	
a1	U	Motor phase U	Max. 6 mm² Max. output voltage: mains voltage Max. permanent output current: type-dependent
a2	V	Motor phase V	
a3	W	Motor phase W	
c1	+PTC	Motor temperature monitoring	Max. 4 mm² PTC thermistor (PTC) or thermal contact (NC contact)
c6	-PTC		
c2	~	Supply voltage of brake rectifier	Max. 4 mm² V_{rated} = mains voltage-dependent The brake rectifier is mounted in the terminal box of the motor.
c3	~		
c4	S1	Switch for separation on the DC side	
c5	S2		
⏚	PE	PE conductor	Max. 6 mm²

X21 - motor connection - device version E84Dx**H**...			
Pin	**Connection**	**Description**	**Data**
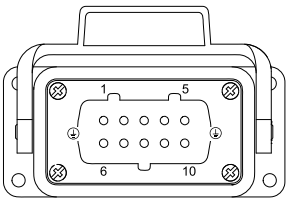		Type Han 10E, sockets	
1	U	Motor phase U	Max. 4 mm²
2	V	Motor phase W	Max. output voltage: mains voltage Max. permanent output current: type-dependent
3	W	Motor phase V	
4	BD1	Motor holding brake	Max. 4 mm²
9	BD2	Motor holding brake (reference conductor)	
5	+PTC	Motor temperature monitoring	Max. 4 mm² PTC thermistor (PTC) or thermal contact (NC contact)
10	-PTC		
6, 7, 8	n. c.	-	-
⏚	PE	PE conductor	Max. 4 mm², above housing

Stop!

Damage of the devices

A defective motor holding brake or a short circuit on the X21 connection (motor and built-on accessories) causes internal damage to the device.

Possible consequences:

► If a defective motor holding brake is connected, the replacement device is also damaged immediately.

Protective measures:

► When devices are replaced due to malfunction of the brake control, ensure that defect-free motor holding brakes are connected.

► Check whether the motor holding brake and the connecting cable are free from defects.

► Replace or repair defective components.

Note!

In the Lenze setting, the temperature monitoring of the motor is activated! To start motors without thermal detectors, the response of the motor temperature monitoring must be deactivated (C00585). Alternatively, a wire jumper between +PTC and -PTC can be used to simulate a normal temperature.

Connection of external brake resistor

X20 - connection of external brake resistor (optional)			
Pin	**Connection**	**Description**	**Data**
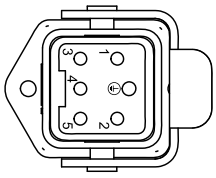 E84DWX0202		Type Q5, sockets	
1	RB2	Brake resistor	max. 2.5 mm^2
2	RB1		
3	T1	In preparation Brake resistor temperature monitoring	
5	T2		
4	n. c.	Not assigned	
⏚	PE	PE conductor	

7.6 Control terminals

7.6.1 Diagnostics

The following can be optionally connected to the X70 diagnostic interface:

- ► USB diagnostic adapter E94AZCUS

  In combination with the Lenze PC software »Engineer«, the diagnostic adapter serves to make comprehensive settings via dialogs, e.g. for initial commissioning.

- ► EZAEBK2001diagnosis terminal

  The diagnosis terminal comprises the keypad including housing and a connecting cable.

  The diagnosis terminal can be used to control or change individual settings. In a quick commissioning menu, the basic settings of the controller can be parameterised using the diagnosis terminal.

The X70 plug is located behind the service hatch. Apply a little pressure to open the service hatch and push the two plastic bars down. Tools are not required.

After using the diagnostic interface, remove the connecting cable at X70 and completely close the service hatch.

X70 - diagnostic interface			
Pin	**Signal**	**Description**	**Data**
8400HLC009		Type RJ69, 10-pole, socket	
1 ... 10	internal	Terminal for diagnosis terminal or diagnostic adapter	

7.6.2 Digital inputs and outputs

Note!

The maximum total current of the 24 V voltage supply for external actuators and encoders is 1 A, e.g. ports

- ► Digital inputs/outputs at X4x,
- ► Analog input at X50 or SSI at X80, and
- ► Serial interfaces RS485/RS422 at X81/X82.

Digital inputs

X41 - digital inputs DI1, DI2			
Pin	**Signal**	**Description**	**Data**
84DPSO05_5		Type M12, 5-pole sockets	
1	24O	24 V supply of the external sensors	
2	DI2	Digital input 2	According to IEC61131-2, type 1 or Two-track frequency input for HTL encoder 0 ... 100 kHz
3	GIO	Reference potential	HIGH +15 .... +30 V DC LOW 0 ... +5 V
4	DI1	Digital input 1	8 mA at 24 V DC
5	n. c.	Not assigned	

X42 - digital inputs DI3, DI4			
Pin	**Signal**	**Description**	**Data**
84DPSO05_5		Type M12, 5-pole sockets	
1	24O	24 V supply of the external sensors	
2	DI4 (DO2)	Digital input 4 (also available as digital output)	HIGH +15 .... +30 V DC
3	GIO	Reference potential	LOW 0 ... +5 V
4	DI3 (DO1)	Digital input 3 (also available as digital output)	8 mA at 24 V DC
5	n. c.	Not assigned	

X43 - digital inputs DI5, DI6			
Pin	**Signal**	**Description**	**Data**
84DPSO05_5		Type M12, 5-pole sockets	
1	24O	24 V supply of the external sensors	
2	DI6	digital input 6	according to IEC61131-2, type 1 or Single-track frequency input, 0 ... 7.5 kHz
3	GIO	Reference potential	HIGH +15 .... +30 V DC LOW 0 ... +5 V
4	DI5	digital input 5	8 mA at 24 V DC
5	n. c.	not assigned	

X45 - digital inputs DI7, DI8			
Pin	Signal	Description	Data
84DPSO05_5		Type M12, 5-pole sockets	
1	24O	24 V supply of the external sensors	
2	DI8	Digital input 8	HIGH +15 .... +30 V DC
3	GIO	Reference potential	LOW 0 ... +5 V
4	DI7	Digital input 7	8 mA at 24 V DC
5	n. c.	Not assigned	

X46 - digital inputs DI9, DI10			
Pin	Signal	Description	Data
84DPSO05_5		Type M12, 5-pole sockets	
1	24O	24 V supply of the external sensors	
2	DI10 (DO4)	Digital input 10 (also available as digital output)	HIGH +15 .... +30 V DC
3	GIO	Reference potential	LOW 0 ... +5 V
4	DI9 (DO3)	Digital input 9 (also available as digital output)	8 mA at 24 V DC
5	n. c.	Not assigned	

X47 - digital inputs DI11, DI12			
Pin	Signal	Description	Data
84DPSO05_5		Type M12, 5-pole sockets	
1	24O	24 V supply of the external sensors	
2	DI12	Digital input 12	HIGH +15 .... +30 V DC
3	GIO	Reference potential	LOW 0 ... +5 V
4	DI11	Digital input 11	8 mA at 24 V DC
5	n. c.	Not assigned	

X48 - digital inputs DI13, DI14			
Pin	Signal	Description	Data
84DPSO05_5		Type M12, 5-pole sockets	
1	24O	24 V supply of the external sensors	
2	DI14	Digital input 14	HIGH +15 .... +30 V DC
3	GIO	Reference potential	LOW 0 ... +5 V
4	DI13	Digital input 13	8 mA at 24 V DC
5	n. c.	Not assigned	

Example circuit

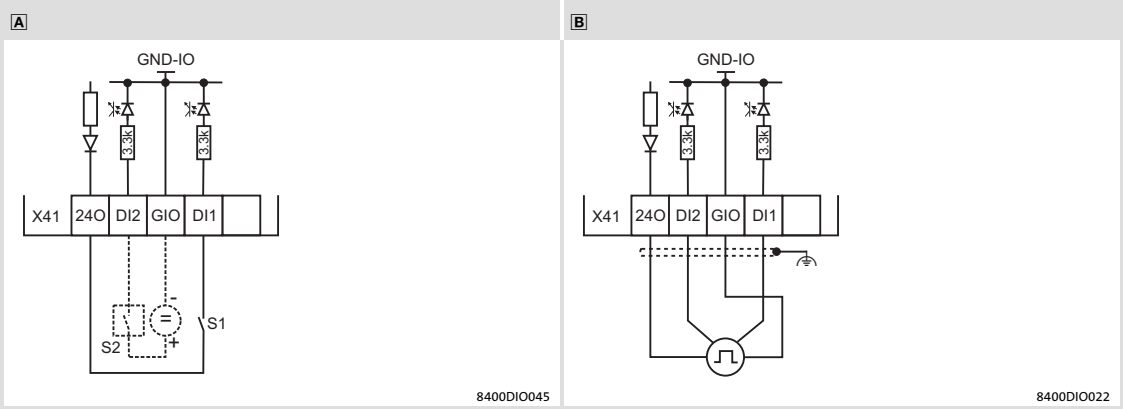

Fig. 7-5 Wiring examples of the digital inputs

A	Wiring of digital inputs, examples:
S1	Potential-free contact, at internal 24 V supply
S2	Signal source, e.g. PLC or with external 24 V supply
B	Connection of an HTL incremental encoder with a maximum input frequency of 100 kHz
	DI1 track A
	DI2 track B
X41	Plugs for digital inputs X41 ... X43
GIO	Ground reference potential for the digital inputs and outputs (GND-IO)

Digital outputs

Note!

If inductive loads are being connected, it is essential to use a spark suppressor at the digital output.

X42 - digital outputs DO1, DO2 (configured digital input!)				
Pin	**Signal**	**Description**	**Data**	
84DPSO05_5		Type M12, 5-pole sockets		
1	24O	24 V supply of the external sensors		
2	DO2	digital output 2 (configured)	HIGH	+24 V or V_{DC} at X10
3	GIO	Reference potential	LOW	0 ... +5 V
4	DO1	digital output 1 (configured)	max. 200 mA per output	
5	n. c.	Not assigned		

X46 - digital outputs DO3, DO4 (configured digital inputs)				
Pin	Signal	Description	Data	
84DPSO05_5		M12 type, 5-pole sockets, A-coded		
1	24O	24 V supply of the external sensors		
2	DO4	Digital output 4	HIGH	+24 V or V_{DC} at X10
3	GIO	Reference potential	LOW	0 ... +5 V
4	DO3	Digital output 3	Max. 200 mA per output	
5	n. c.	Not assigned		

Example circuit

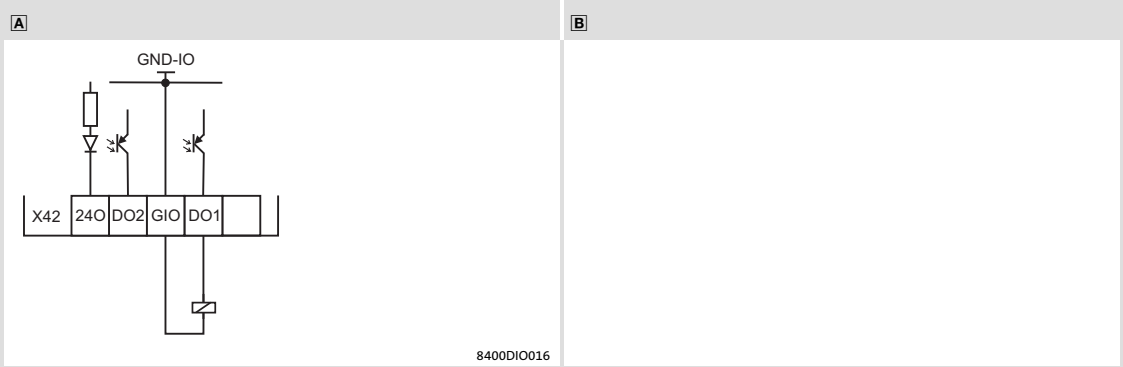

Fig. 7-6 Wiring examples of the digital inputs and outputs

A	Digital control (relay, valve, ...) with internal 24 V supply
B	-
X42	Plug for the digital outputs (configured)
GIO	Ground reference potential for the digital inputs and outputs (GND-IO)

7.6.3 Synchronous serial interface (SSI)

X80 - SSI			
Pin	**Signal**	**Description**	**Data**
84DPSO05_8		M12 type, 8-pole sockets	
1	CLK+	Pos. clock signal	
2	CLK-	Neg. clock signal	
3	Data+	Pos. data line	
4	Data-	Neg. data line	
5	n. c.	Not assigned	-
6	n. c.	Not assigned	-
7	GIO	Reference potential	External supply at 24E: Voltage drop < 2.5 V Total current for X4x, X50/X8x: 1 A
8	24O	24 V supply of the external SSI encoders	

7.6.4 Interfaces RS485/422 PLC

These connections are available with device versions:

- E84D**D**xxxxxxx**C1C**xxx
- E84D**E**xxxxxxx**C1C**xxx
- E84D**F**xxxxxxx**C1C**xxx
- E84D**L**xxxxxxx**C1C**xxx
- E84D**P**xxxxxxx**C1C**xxx

X81 - RS485 PLC			
Pin	Signal	Description	Data
84DPSO05_8		M12 type, 8-pole sockets, A-coded	
1	+24V	24 V supply	In accordance with IEC 61131-2, type 1
2	RxD+	RS485A’	In accordance with ANSI/TIA/EIA-485-A-98
3	GND-EXT	Reference potential	24 V supply
4	RxD-	RS485B’	In accordance with ANSI/TIA/EIA-485-A-98
5	TxD+	RS485A	
6	TxD-	RS485B	
7	n. c.	not assigned	-
8	n. c.		

X82 - RS422 PLC			
Pin	Signal	Description	Data
84DPSO05_8		M12 type, 8-pole sockets, A-coded	
1	+24V	24 V supply	In accordance with IEC 61131-2, type 1
2	RxD+	Reception+	In accordance with ANSI/TIA/EIA-422
3	GND-EXT	Reference potential	24 V supply
4	RxD-	Reception-	In accordance with ANSI/TIA/EIA-422
5	TxD+	Transmission+	
6	TxD-	Transmission-	
7	n. c.	not assigned	-
8	n. c.		

Please observe that the direct coupling of two 8400 protec EMS devices require an external connection with terminating resistors.

7.6.5 Interfaces RS485 PLC

These connections are available with device versions:

- E84D**D**xxxxxxx**C**x**B**xxx
- E84D**E**xxxxxxx**C**x**B**xxx
- E84D**F**xxxxxxx**C**x**B**xxx
- E84D**L**xxxxxxx**C**x**B**xxx
- E84D**P**xxxxxxx**C**x**B**xxx

X81/X82 - RS485 PLC			
Pin	Signal	Description	Data
84DPSO05_8		M12 type, 8-pole sockets, A-coded	
1	TxD+	RS485A	In accordance with ANSI/TIA/EIA-485-A-98
2	TxD-	RS485B	
3	RxD+	RS485A’	
4	RxD-	RS485B’	
5	n. c.	Not assigned	-
6	n. c.		
7	GND-EXT	Reference potential	In accordance with IEC 61131-2, type 1
8	+24V	24 V supply	

7.6.6 Interfaces RS422 PLC

These connections are available with device versions:

- ► E84D**D**xxxxxxx**C**x**D**xxx
- ► E84D**E**xxxxxxx**C**x**D**xxx
- ► E84D**F**xxxxxxx**C**x**D**xxx
- ► E84D**L**xxxxxxx**C**x**D**xxx
- ► E84D**P**xxxxxxx**C**x**D**xxx

Because of the integrated PLC also SSI encoders can be evaluated at RS422 interfaces (max. 150 kHz).

X81/X82 - RS422 PLC			
Pin	Signal	Description	Data
84DPSO05_8		M12 type, 8-pole sockets, A-coded	
1	TxD+ (CLK+)	Transmission+	● In accordance with ANSI/TIA/EIA-422 ● At RS422, PLC supports evaluation of SSI encoders (max. 150 kHz).
2	TxD- (CLK-)	Transmission-	
3	RxD+ (Data+)	Reception+	
4	RxD- (Data-)	Reception-	
5	n. c.	Not assigned	-
6	n. c.		
7	GND-EXT	Reference potential	In accordance with IEC 61131-2, type 1
8	+24V	24 V supply	

Please observe that the direct coupling of two 8400 protec EMS devices require an external connection with terminating resistors.

7.7 Communication

Carry out the installation in accordance with the mounting directives of the fieldbus systems in order to prevent a faulty communication. Please observe the notes on the additional equipotential bonding.

Stop!

High compensation currents

High compensation currents can flow via the shield of the fieldbus cable.

Possible consequences:

Damage to material assets or failures

Protective measures:

Prevent compensation currents via the shield of the fieldbus cable as follows:

- ► Connect all fieldbus nodes with a 16 mm^2 cable via the earthing studs.
- ► Lay this cable in parallel to the bus cable.
- ► Ensure a highly conductive connection of all earthing studs with a copper braid cable to the mounting surface.

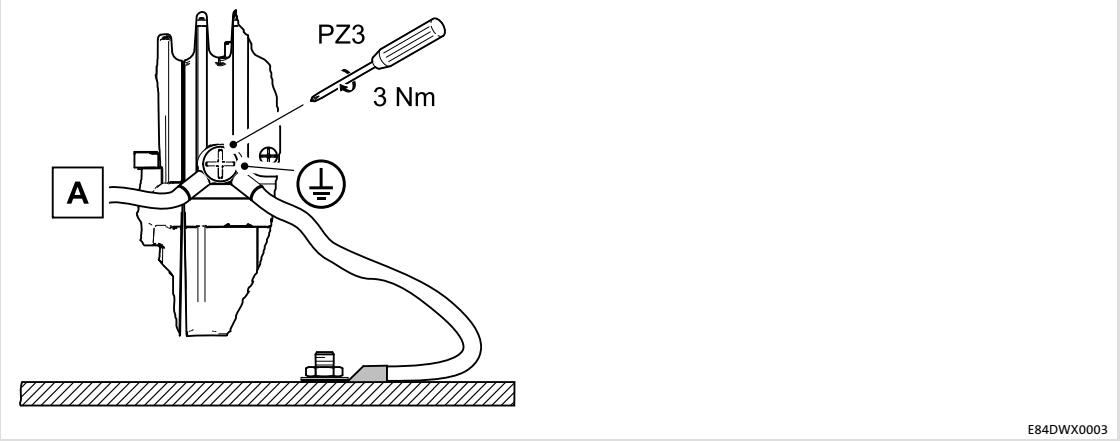

⏚ Earthing for compliance with EMC conditions, prevents compensation currents via the shield of the fieldbus cable

A 16 mm^2 equalizing conductor with ring cable lug M6

The communication cables of the available fieldbus systems can be installed using different plug versions. The type code provides information on the design of one device.

7.7.1 CANopen

X3x - communication			
Pin	**Signal**	**Description**	**Data**
84DPSO05_5		Type: M12, 5-pole, A-coded X31 -> pins X32 -> sockets	
1	n. c.	Not assigned	CAN specification
2	n. c.	Not assigned	
3	CG	CAN-Ground	
4	CH	CAN-HIGH	
5	CL	CAN-LOW	

7.7.2 CANopen master PLC

X34 - CANopen master PLC			
Pin	Signal	Description	Data
84DPSO05_5		M12 type, 5-pole sockets, A-coded	
1	⏚	Shielding (functional earth)	-
2	n. c.	Not assigned	-
3	CAN_GND	CAN GND	In accordance with CAN specification
4	CANH	CAN HIGH	
5	CANL	CAN LOW	

Example circuit

Wiring example

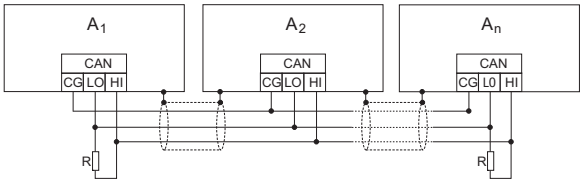

Terminating resistors of 120 Ω are not integrated and must be wired externally.

Software manual for the standard device / »Engineer« online help

Here, detailed information is provided about ...

► CAN communication;
► Parameter setting and configuration;
► System bus (CAN) diagnostics.

8 Commissioning

Note!

► Please observe the general safety instructions (📖 14).
► Please observe the notes regarding residual hazards (📖 20).

Danger!

Uncontrolled motor movements may occur

Under certain conditions, the motor may rotate after mains connection.

Possible consequences:

► Near the machine or plant, situations may arise that are hazardous to persons.
► The machine or plant may be damaged by an unexpected start.

Protective measures:

► Commissioning with external 24 V supply and without mains voltage
► Remove motor connector X21. An active motor temperature monitoring prevents a motor voltage from being output. If the monitoring is deactivated, a voltage may be applied at the plug.
► Ensure that no setpoint is applied.

8.1 Before switching on

Note!

Please observe during transport, storage and operation:

► Cover unused connectors for control connections and interfaces with the plastic covers provided to preserve the certified safety technology features.

Check that all connectors are properly locked in order to ensure trouble-free operation.

Note!

► Comply with the respective switch-on sequence.

► In case of trouble during commissioning, the following supports you:
– The ”Diagnostics” chapter
– The online help in the »Engineer«
– The software manual of the prevailing device version

In order to avoid injury to persons or damage to material assets, check ...

... before switching on the mains voltage:

► Check the wiring for completeness, short-circuit and earth fault

► The ”emergency switching off” function of the entire plant

► The motor circuit configuration (star/delta) must be adapted to the output voltage of the controller

► The in-phase connection of the motor

► The direction of rotation of the incremental encoder (if available)

...the setting of the most important drive parameters before controller enable to ensure the following:

► The V/f rated frequency is adapted to the motor circuit configuration!

► The drive parameters relevant for your application are set correctly!

► The configuration of the analog and digital inputs and outputs are adapted to the wiring!

Tip!

Use the L-force ”Engineer” to carry out extensive parameter setting and configuration. The L-force keypad can be used for quick commissioning and checking individual parameters. If you want to use the L-force ”Engineer”, the online help and the software documentation for the controller assist you.

8.2 Preparing the commissioning procedure

You need the following for commissioning:

- ► Computer with a Windows® operating system (XP, 7 or 2000)
- ► Lenze »Engineer« PC software
- ► Connection to the controller via an interface, e.g.
  - – diagnostic interface X70 with diagnostic USB adapter
  - – Fieldbus
- ► Software manual for the technology application used
- ► These Operating instructions
- ► Manual for the drive-based safety
- ► Communication manual for the network of the automation platform
- ► 24 V voltage supply for the control electronics of the controller
  - – by switching on the mains voltage
  - – alternatively by a 24-V buffer voltage

Follow the instructions of the software and/or read the documentation.

Selection of the appropriate commissioning tool

There are two ways to commission the 8400 frequency inverter:

- ► Commissioning using the keypad (or diagnosis terminal)
  - – For simple drive tasks such as quick commissioning of the 'Speed closed-loop control' standard application
- ► Commissioning using the »Engineer«
  - – For rather demanding drive tasks such as 'Table positioning' of the HighLine version
  - – Supported by online help and accompanying software documentation (software manual)

Note!

The following can be used at the diagnostic interface X70:

- ► Diagnosis terminal X401 (EZAEBK2003)
  - – The described settings with the keypad X401 can also be carried out with the diagnosis terminal X401.
- ► USB diagnostic adapter (E94AZCUS)

Notes on commissioning in the case of an external 24 V supply

The following sequence must be observed when commissioning devices with an external 24 V supply:

► Switch-on
  – Connection of the external 24 V supply
    The control electronics and fieldbus communication are started and the display shows the ”LU” message (undervoltage in the DC bus)
  – Connection of the 400 V mains voltage
    The message in the display goes off / changes over to .

► Switch-off
  – Switch-off of the 400 V mains voltage
  – Switch-off of the 24 V supply

Note!

The functions of the control electronics become inactive when the 24 V supply is switched off. The switch function of Ethernet-based fieldbuses is also inactive.

Switching the 24 V supply when the mains voltage is applied may lead to an error status in higher-level controls.

Notes for the commissioning of EMS versions

For EMS version devices, in addition the following has to be observed:

► Devices with a rocker switch control element
  – To enable the controller, the rocker switch has to be operated.
  – Operating the rocker switch again inhibits the controller.

► Device without a rocker switch control element
  The controller has to be enabled using the available communication options.

Notes for motor operation

Danger!

- ► For thermal reasons, continuous operation of self-ventilated motors at low field frequency and rated motor current is not permissible. If required, activate a motor temperature monitoring with C00585
  – motor temperature monitoring with I^2xt (see software manual)
  – motor temperature monitoring with motor PTC (see software manual).
- ► Select 87-Hz operation under code C00015 if an asynchronous motor in delta connection (nameplate data: 400 VY/230 V△) is to be operated on a frequency inverter for a supply voltage of 400 V.

Tip!

In the Lenze setting, the ”linear V/f characteristic” operating mode is set as motor control. The parameter settings are preset so that if the frequency inverter and the 50 Hz asynchronous machine match in terms of power, the controller is ready for operation without any further need for parameterisation and the motor operates satisfactorily.

Recommendations for the following application cases

- ► If the frequency inverter and the motor differ strongly in terms of power
  – Set code C00022 (I_{max} limit in motor mode) to 2.0 $I_{N(motor)}$.
- ► If a high starting torque is required
  – When the motor is idling, set the code C00016 (V_{min} boost) so that a rated motor current flows with a field frequency f = 3 Hz (C00058).
- ► For noise reduction
  – Set code C00018 to the value ”3” (switching frequency 16 $kHz_{sin\ var}$).
- ► If a high torque without feedback is to be available at low speeds, we recommend the ”vector control” mode.

8.3 Quick commissioning

Target

For test and demonstration purposes, the load-free motor shall be rotated in best time with an amount of wiring as little as possible and few settings.

Keypad or setpoint potentiometer

For this simple application, you can choose between two drive control options:

- Keypad control (📖 146), i.e. the X400 keypad is used as setpoint source
- Terminal control (📖 148), i.e. a setpoint potentiometer connected to the controller terminals is used as setpoint source

Diagnostics

In addition to the keypad, also use the LEDs on the front of the controller for drive diagnostics:

- Two LEDs indicate the device status (DRIVE READY and DRIVE ERROR)
- Two LEDs indicate the bus status (CAN-RUN and CAN-ERROR)

The LEDs for the bus status are less important during quick commissioning.

Tip!

The handling of the keypad X401 or the diagnosis terminal X401 is described in the operating instructions. The instructions are supplied with the keypad and are also included in electronic form on the product CD ”L-force Inverter Drives 8400”.

8.3.1 Keypad control

Commissioning steps

1. Wiring of power terminals

The ”Electrical installation” chapter and the mounting instructions provide information on the correct wiring of the power terminals according to the requirements of your device.

2. Wiring of control terminals.
3. Load Lenze setting to controller

Note!

The application ”actuating drive speed” is implemented with the Lenze setting.

After attaching the keypad or switching on the controller with keypad attached, the connection between keypad and controller is established.
The connection has been established when the code C00051 appears in the display.

- Then press the left function key.

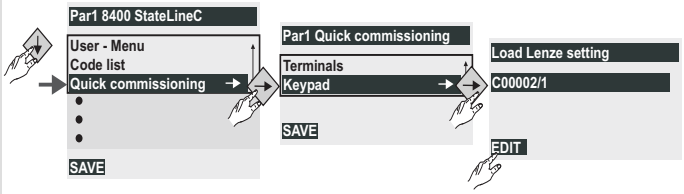

- Starting from ”User menu” scroll down with button to ”Quick commissioning” menu
- Click right button.
- Select ”Keypad” menu.
- Click right button.
- Code 00002/1:
  – Parameterise with left ”Edit” function key
  – Select value ”1”- -> On/Start and confirm with right ”OK” function key.

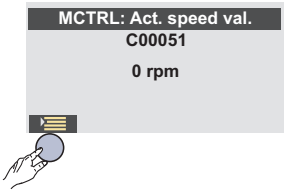

- When the Lenze setting is loaded, the display goes off for a short time.
- When the display goes on again, the main menu appears.
  – The main menu settings can be defined by the user using codes C00465 ... C00469.
- Press the left function key to go to the user menu.

4. Set keypad control

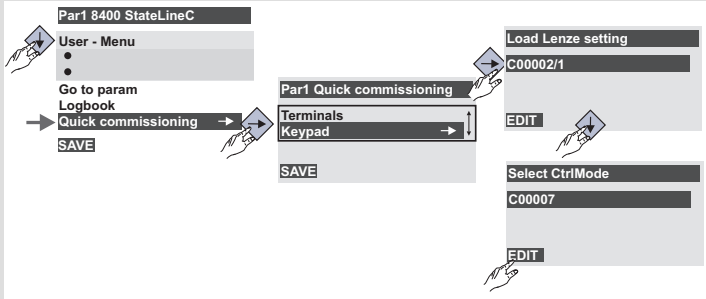

Continue as in commissioning step ▶ 3. Load Lenze setting to controller:
– ”Quick commissioning” menu
– Keypad
– Load Lenze setting

Use the ”down” navigation key to go to code C00007 for selecting the control mode:
- Select parameter code 00007 and parameterise with ”Edit”
- Select value ”20”- -> keypad and confirm with ”OK”.

5. Enable controller:
   – 8400 protec controllers are automatically enabled after mains connection. They can also be enabled or inhibited via code C00002/16.
6. Vary the motor speed using the keypad or by defining different fixed setpoints:

Keypad	Code	Subcode	Motor speed
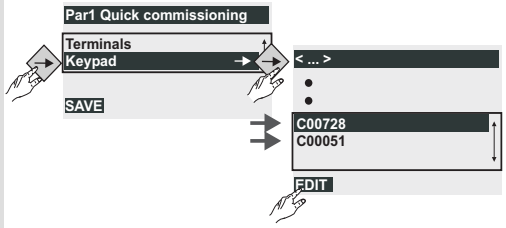	C00728	3	CCW rotation: -199.99 % .... 0 (of C00011) CW rotation: 0 .... +199.99 % (of C00011)
	C00051	-	Display of actual speed value

► Please observe:
   – The actual speed value: C00051

7. Save the settings with SAVE in the keypad.

8.3.2 Terminal control

Commissioning steps

1. Wiring of power terminals

Make use of the Mounting Instructions supplied with the frequency inverter to wire the power terminals according to the requirements of your device.

2. Wiring of control terminals.

Analog inputs at X50	Assignment	Terminal control
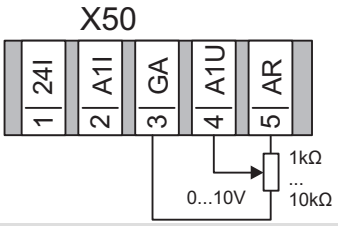	A1U	Setpoint selection 10 V (=100 %): 1500 min^{-1} (with 4-pole motor)

Wiring of the digital outputs at X41	Assignment	Terminal control
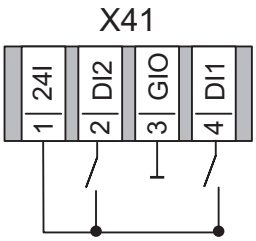	DI1	Fixed frequency 1 ... fixed frequency 3, see table below
DI1 ... DI2: active = HIGH	DI2	

Wiring of the digital outputs at X42	Assignment	Terminal control
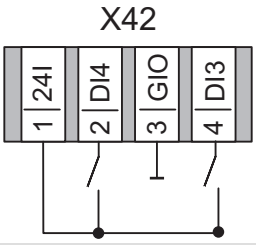	DI3	DCB
DI3 ... DI4: active = HIGH	DI4	Direction of rotation left/right (CCW/CW)

3. If you can be sure that the frequency inverter is in the default state (Lenze setting), you can skip the following step. If not, establish the Lenze setting of the frequency inverter. We recommend to use the keypad for this.

Note!

The application ”actuating drive speed” is implemented with the Lenze setting.

After attaching the keypad or switching on the controller with keypad attached, the connection between keypad and controller is established.
The connection has been established when the code C00051 appears in the display.
- Then press the left function key.

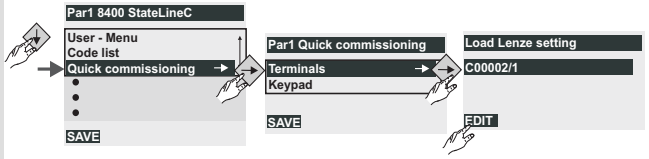

- Starting from "User menu" scroll down with button to "Quick commissioning" menu
- Click right button.
- Select "Keypad" menu.
- Click right button.
- Code 00002/1:
  – Parameterise with left "Edit" function key

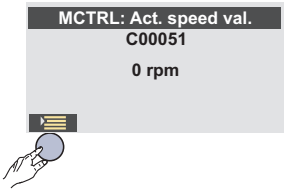

- When the Lenze setting is loaded, the display goes off for a short time.
- When the display goes on again, the main menu appears.
  – The main menu settings can be defined by the user using codes C00465 ... C00469.
- Press the left function key to go to the user menu.

4. Enable controller:
   – 8400 protec controllers are automatically enabled after mains connection. The motor rotates according to the default value at the analog input or the defined fixed setpoints.
5. Vary the motor speed with the potentiometer or by defining different fixed setpoints:

DI2	DI1	Motor speed
0	0	Setpoint by potentiometer
0	1	40 % of C00011 (reference speed)
1	0	60 % of C00011 (reference speed)
1	1	80 % of C00011 (reference speed)

► Please observe
   – the actual speed value: C00051
   – the front LEDs (📖 161)

6. Save the settings with SAVE in the keypad.

9 Braking operation

When electric motors are braked, the kinetic energy of the drive train is fed back into the DC circuit regeneratively. This energy leads to an increase in the DC bus voltage. In order to avoid overvoltage in the DC bus, several different strategies can be used:

- Braking operation without brake resistor

  For braking operation without brake resistor, integrated functions are used in the inverter which can be parameterised with the »Engineer«:

  – DC-injection brake DCB

  – Stop of the ramp function generator

  – Inverter motor brake (from software version 01.01)

  The functions are suitable for simple applications which do not require an exact compliance with the deceleration ramp. The functions can be combined, e. g. for an emergency braking in case the brake resistor fails.
- Braking operation with internal brake resistor
- Braking operation with external brake resistor
- Braking operation with spring-applied brake

Stop!

- The two braking procedures ”Stopping of the ramp function generator” and ”Inverter motor brake” are only active in speed-controlled applications if the position controller does not interfere!
- Do not additionally adapt the motor load (I2xt) if the inverter motor brake is used!
  In this case, the motor may thermally overload or the motor overload monitoring (I2xt) may be working incorrectly!

9.1 Braking operation without brake resistor

DC injection brake DCB

To decelerate small masses, the ”DC injection brake DCB” function can be parameterised. DC-injection braking enables a quick deceleration of the drive to standstill without the need for an external brake resistor.

- Code C00036 can be used to select the braking current.
- The maximum braking torque to be realised by the DC braking current amounts to approx. 20 ... 30 % of the rated motor torque. It is lower compared to braking action in generator mode with external brake resistor.
- Automatic DC-injection braking (Auto-DCB) improves the starting performance of the motor when the operation mode without speed feedback is used.

Further information on the relevant parameters can be obtained from the software manual.

Stopping of the ramp function generator

The ”Stopping of the ramp function generator” response is set in C00175. If the brake chopper threshold in the DC-bus connection which results from C00173 and C00174 is exceeded, the ramp function generator is stopped.

This function is suitable for braking operations with reduced dynamics and torque oscillations.

Inverter motor brake

During this alternative braking procedure which can be selected in C00175, the energy conversion of the regenerative energy of the motor is achieved by dynamic acceleration/deceleration while the ramp function generator is ramped down.

The ramp function generator is stopped during acceleration. Using a hysteresis controller, the speed set in C00987 is added to the speed setpoint. The sign of the current actual speed is considered in the process. The ramp function generator is also stopped if an overvoltage occurs.

If the DC-bus voltage falls below a defined DC-bus voltage potential of the hysteresis controller, the connected additive speed is removed and the ramp function generator is enabled again.

The energy which results from the alternating acceleration and braking procedure due to this switching operation is converted into heat in the motor.

In general, the following applies to the ”Inverter motor brake” function:

- The regenerative energy converted in the motor can be increased and the braking procedure can be accelerated if the additive speed setpoint is decelerated and the corresponding filter time constant is reduced.
- There may be procedure-related torque oscillations. Mechanical vibrations can be reduced by reducing the additive speed setpoint (C00987) or by increasing the filter time constant.

The illustration below provides a schematic overview of the function modes of the various braking procedures:

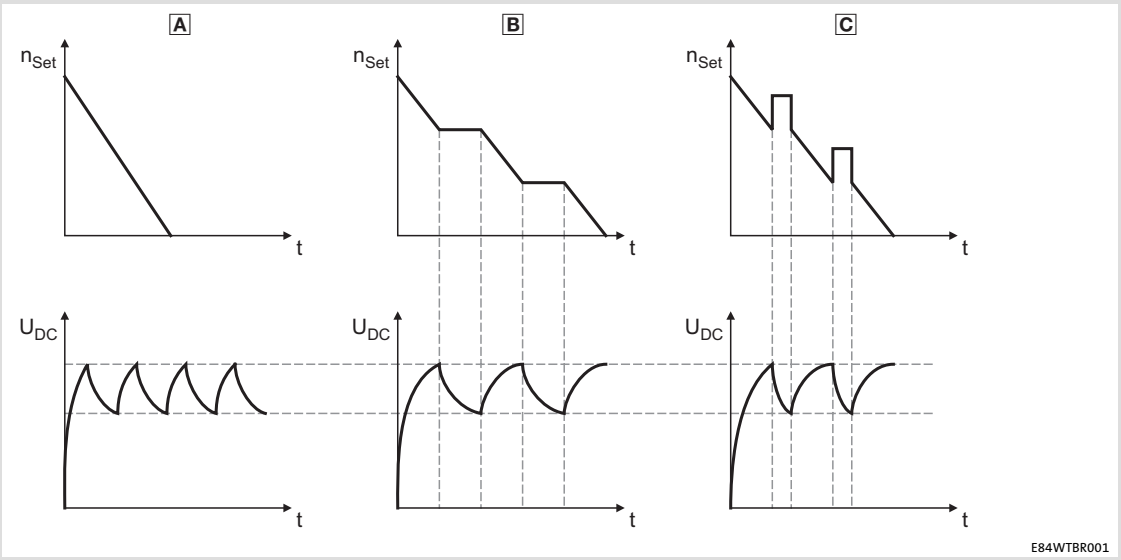

Fig. 9-1 Behaviour of the effective speed setpoint and the DC-bus voltage during the braking process

Further information on the parameterisation of all mentioned braking procedures for the respective device version is provided in the chapter ”Motor control (MCTR)”.

9.2 Braking operation with internal brake resistor

Inverters for motor powers of 0.75 kW and 1.5 kW are available with an internal brake resistor. For these inverters, the codes C00129, C00130 and C00131 cannot be parameterised. They are automatically set to the standard values of the internal brake resistor.

9.3 Braking operation with external brake resistor

To decelerate greater moments of inertia or with a longer operation in generator mode an external brake resistor is required. It converts braking energy into heat.

The brake resistor is connected if the DC-bus voltage exceeds the switching threshold. This prevents the controller from setting pulse inhibit through the ”Overvoltage” fault and the drive from coasting. The external brake resistor serves to control the braking process at any time.

The brake chopper integrated in the controller connects the external brake resistor.

► Adapt the switching threshold to the mains voltage (C00173/C00714, see software manual).

The rated data for the brake chopper are provided in the chapters 4.2.2 and 4.2.3.

9.3.1 Selection of the brake resistors

To decelerate greater moments of inertia or with a longer operation in generator mode an external brake resistor is required. It converts braking energy into heat.

The brake resistors recommended in the accessories chapter are designed to tolerate a regenerative power of approx. 1.5 times the normal value. The cycle time of the brake resistors is 150 s and includes a braking time of max. 15 s and a recovery time (pause) of min. 135 s.

- ► The brake resistors are equipped with a thermostat each (potential-free NC contact, switching capacity: AC 250V, 0.5A).
- ► To increase the power, brake resistors can be connected in parallel or in series.
  - – The resistance for the controller must not fall below the lowest permissible value.
  - – The thermostat of several brake resistors at a controller must always be connected in series.

Note!

The 8400 protec devices do not allow for the thermostats of brake resistors to be monitored via a specific terminal.

Exception: E84DHxxx7524

For special applications, e.g. centrifuges, the suitable brake resistor must meet the following criteria:

Brake resistor	Application	
Criterion	with active load	with passive load
Continuous braking power [W]	$P_{max} \cdot \eta_e \cdot \eta_m \cdot \frac{t_1}{t_{zykl}}$	$\frac{P_{max} \cdot \eta_e \cdot \eta_m}{2} \cdot \frac{t_1}{t_{zykl}}$
Heat quantity [Ws]	$P_{max} \cdot \eta_e \cdot \eta_m \cdot t_1$	$\frac{P_{max} \cdot \eta_e \cdot \eta_m}{2} \cdot t_1$
Resistance [Ω]	$R_{min} \leq R \leq \frac{U_{DC}^2}{P_{max} \cdot \eta_e \cdot \eta_m}$	

Active load	Can start to move independently of the drive (e.g. unwinder)
Passive load	Can stop independently of the drive (e.g. horizontal travelling drives, centrifuges, fans)
V_{DC} [V]	Brake chopper switching threshold from C0174
P_{max} [W]	Maximum occurring braking power determined by the application
η_e	Electrical efficiency (inverter + motor) Guide values: 0.54 (0.25 kW) ... 0.85 (11 kW)
η_m	Mechanical efficiency (gearbox, machine)
t_1 [s]	Braking time
t_{cycl} [s]	Cycle time = time between two successive braking processes (= t_1 + dead time)
R_{min} [Ω]	Minimum permissible brake resistance (see rated data of the integrated brake chopper)

9.3.2 Wiring of brake resistor

Danger!

Hazardous electrical voltage

During operation of the standard device and **up to 3 minutes after power-off** hazardous electrical voltages may occur at the terminals of the brake resistor.

Possible consequences:

► Death or severe injuries when touching the terminals.

Protective measures:

► Disconnect the standard device from the mains before working on the brake resistor.

► Check all power terminals for isolation from supply.

► Select the mounting location so that the operating conditions mentioned in the mounting instructions for the brake resistor are permanently guaranteed.

Danger!

Hot surface

The brake resistor may get very hot. (For temperatures see the mounting instructions for the brake resistor.)

Possible consequences:

► Severe burns when touching the brake resistor.

► Fire or smouldering fire if flammable material is placed near the brake resistor or may get to it.

Protective measures:

► Before working on the brake resistor, check its surface temperature.

► Select the mounting location so that the operating conditions mentioned in the mounting instructions for the brake resistor are permanently guaranteed.

► Protect the mounting location through fire prevention.

Protect the brake resistor and controller against destruction caused by overload:

► Establish an external safety shutdown using the thermostat of the brake resistor to disconnect the controller from the mains.

► Exception for devices with special connection for the thermostat of the brake resistor: Use the device-internal safety shutdown.

Connecting cable version

► up to 0.5 m: twisted and unshielded

► from 0.5 to 5 m: shielded

– Use shielded cables to meet the EMC requirements.

Wiring principle

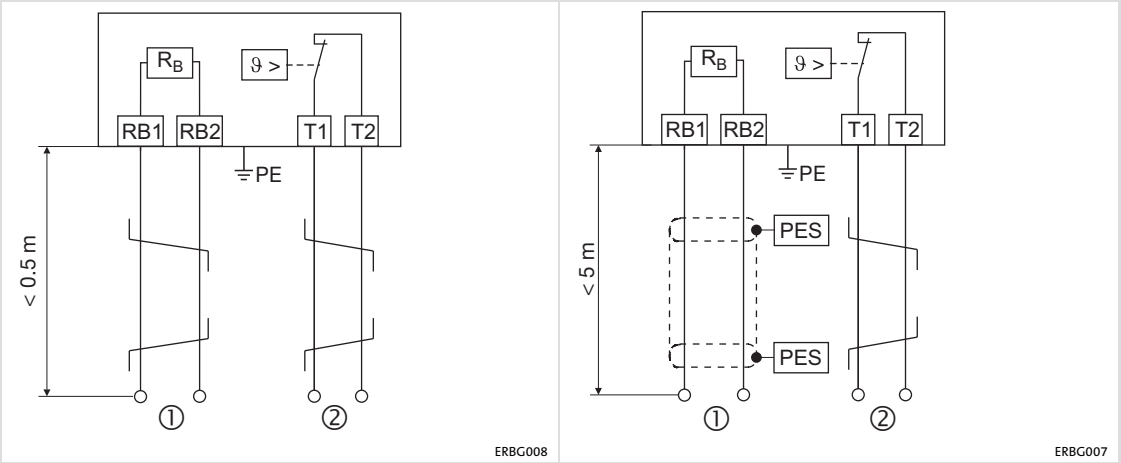

Fig. 9-2 Wiring of a brake resistor to the controller

PES	HF-shield termination by PE connection via shield clamp
Rb1, Rb2	Terminals of the brake resistor
①	Supply cable to the controller
T1, T2	Terminals temperature monitoring of the brake resistor (thermal contact/NC contact)
②	Supply cable for evaluation of temperature monitoring (to be integrated e.g. into the latch circuit of the mains contactor of the supply)

The brake resistor is thermally stressed due to converted braking power and may be thermally destroyed as a consequence of excessive braking power.

To avoid thermal overload of the brake resistor:

► set additional parameters in the »Engineer«

or

► implement external wiring using a temperature contact on the brake resistor (e.g. interrupted supply and activation of the mechanical brakes).

To protect the brake resistor:

► use the monitoring of the I^2xt utilisation of the controller which is proportional to the converted braking power.

Evaluation of the thermal contact via digital input

As an alternative to the integration of the thermal contact via a mains contactor, the brake resistor can also be monitored via a digital input. Please use a Lenze system cable. The response to the input signal must be parameterised in the FB Editor using the »Engineer«.

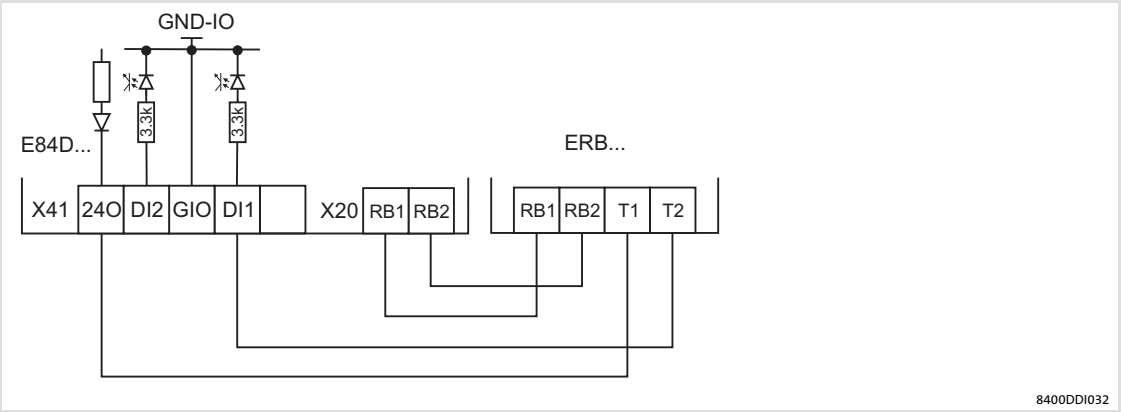

E84D...	8400 protec
X41	Digital input
X20	Brake resistor connection
ERB...	Brake resistor

Evaluation of the thermal contact via analog input

As an alternative to the integration of the thermal contact via a mains contactor, the brake resistor can also be monitored via an analog input. Please use a Lenze system cable. The response to the input signal must be parameterised in the FB Editor using the »Engineer«.

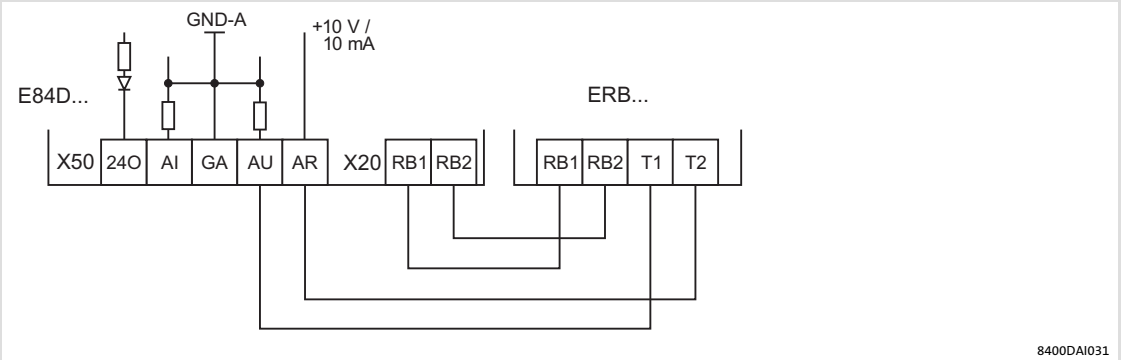

E84D...	8400 protec
X50	Analog input
X20	Brake resistor connection
ERB...	Brake resistor

Further information on brake resistor monitoring is provided in:

► the 8400 protec software manual, chapter ”Motor control” ➔ ”Monitorings”

9.4 Operation with spring-applied brake

9.4.1 Introduction

Stop!

The integrated brake control includes an electronic switch which can control a motor holding brake.

Only motor holding brakes which comply with the permissible data mentioned in the Technical Data may be connected to the integrated brake control. (If necessary, the holding brake must be controlled without a brake control via a digital output and a coupling relay.)

If the permissible values mentioned in the Technical Data are not observed:

► the brake control may be destroyed.

► a safe operation of the motor holding brake is not ensured.

Lenze three-phase AC motors and G-motion geared motors can be equipped with spring-applied brakes (motor holding brakes). 8400 protec controllers have an integrated motor brake control.

Switching the brake

- Fast switch design

  An external motor brake control module is required for the switching operations and the DC supply of the spring-applied brake. The suitable motor brake control module must be selected according to the rated data of the spring-applied brake.

  The fast switch option also offers the possibility of a quick switch-off. Here, a relay contact is controlled in the supply circuit of the coil via the inverter. In order to prevent sparking, the motor brake control module must be equipped with a spark suppressor.

  Wiring: See motor connection for type Modular

- ”Integrated brake rectifier” version

  The voltage required for controlling the motor brake is generated in the controller, dependent on the mains voltage value. The following motor brakes can be connected:

  – to the 400-V mains: coil voltage 180 V DC, max. 50 W

  – to the 500-V mains: coil voltage 225 V DC, max. 50 W

  The rated coil voltage is neither increased nor reduced.

  Wiring: See motor connection for type Q8/0

- ”24 V DC” version (only for EMS version)

  The voltage required for controlling the motor brake is fed into the inverter by an external voltage source. The following motor brakes can be connected:

  – Coil voltage 24 V DC

  Wiring: See motor connection for type Q8/0

- Cold brake design

  The voltage required for controlling the motor brake is generated in the controller proportionately to the mains voltage. The following motor brakes can be connected:

  – to the 400 V mains: coil voltage 180 V DC

  – to the 500 V mains: coil voltage 225 V DC

  To ensure a safe release of the brake, 130 % of the rated coil voltage is connected to the coil for 0.3 s. Then, this voltage is reduced to 65 % of the rated coil voltage.

  Wiring: See motor connection for type Q8/0

Options for switching the brake:

- Control via an external control contact (e. g. PLC)
- Control via a brake switch which is connected to a digital output of the controller. The digital output is parameterised accordingly.

The software manual provides further information on the parameterisation and integrated brake management.

9.4.2 Wiring

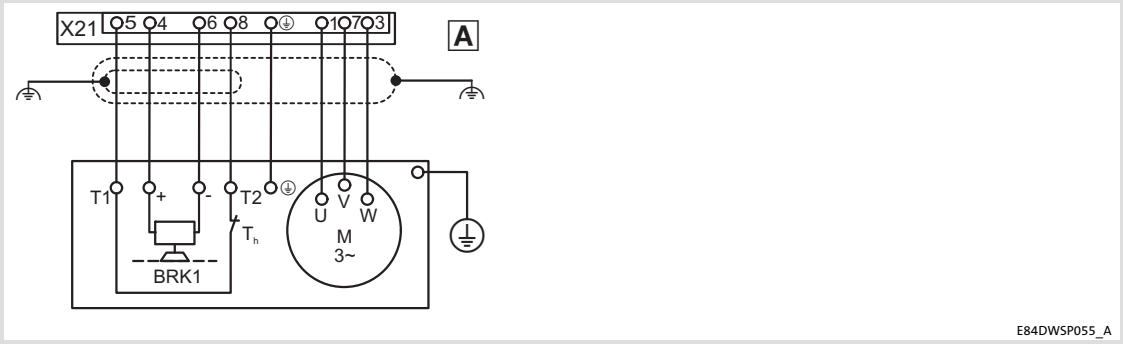

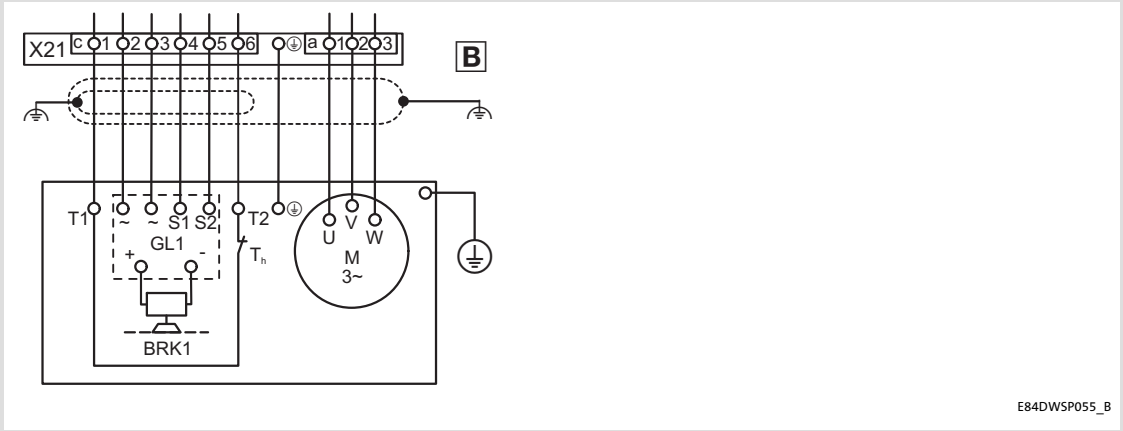

A	”Cold brake” or ”Integrated brake rectifier” wiring ”24 V DC” Connection system of plug type Q8/0
B	”Fast switch” wiring, connection system plug type Modular
X21	Motor connection
BRK1	Spring-applied brake
GL1	Spring-applied brake control
T_h	PTC thermistor (PTC) or thermal contact (NC contact)
M	Motor
⏚	HF-shield termination by large surface connection to PE.
⏚	Earthing

10 Diagnostics

10.1 Display of operating data, diagnostics

- ► LEDs on the controller provide information on the operating status.
- ► Basic diagnostics is performed directly on the controller.
- ► Use the keypad to perform easy and quick diagnostics.
  - – The keypad can only be used in the diagnosis terminal version (= keypad including holder and connecting cable) for 8400 protec controllers. Please always substitute the term ’keypad’ for ’diagnosis terminal’ in the following.
- ► Perform comprehensive diagnostics and settings via your PC using the »Engineer« software.

10.1.1 Status display via controller LEDs

Depending on the version, during operation the operating status of the controller is displayed with LEDs. They are located on the front of the device.

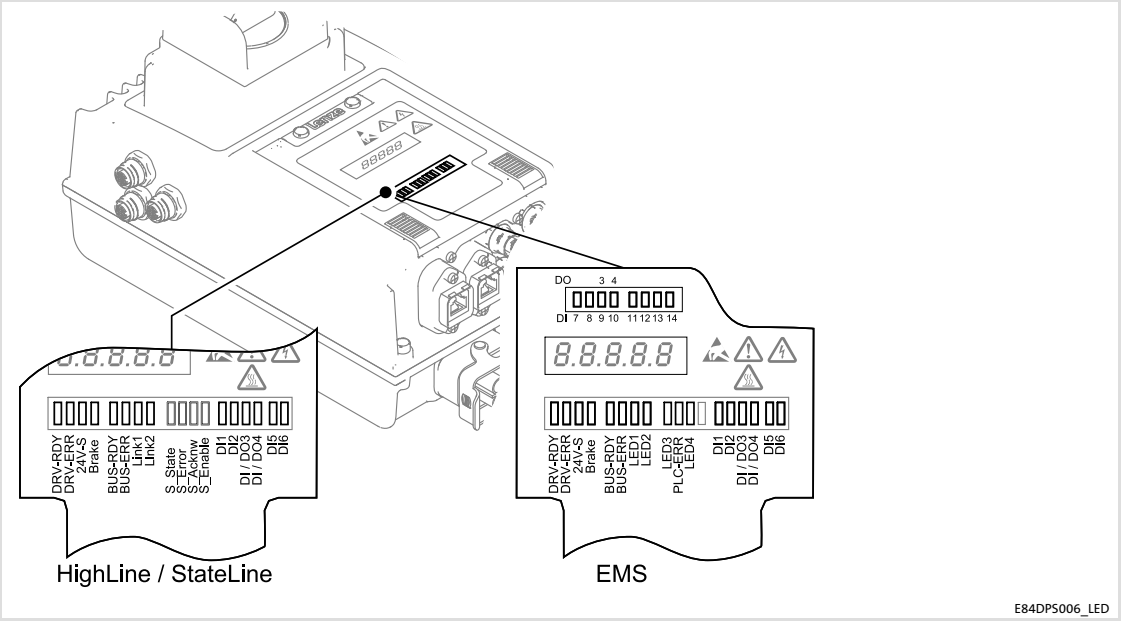

Status display: device

Pos.	Colour	State	Description
DRV-RDY	green	on	Controller is ready
		blinking	Controller is enabled
ERR	red	on	System error
		blinking	Fault is active
		off	No fault
24V-S	green	on	24 V voltage is ready
		off	24-V voltage is not ready
Brake	yellow	on	Motor holding brake is controlled (released)
		off	Motor holding brake is not controlled (applied)

Status display: fieldbus interface

Pos.	Colour	State	Description
BUS-RDY	green	blinking	Communication has been established
		on	Communication has been stopped
		off	Communication has not been initialised
BUS-ERR	red	fast blinking	Communication error for PROFINET: Node not recognised
		blinking	for PROFINET: Node recognition
		on	Communication error
Link-1	yellow	fast blinking	only for PROFINET: Communication is active, telegrams are transmitted
Link-2		blinking	Initialisation
		off	Communication is not active

Status display: Digital signals

Pos.	Colour	State	Description
DI1	yellow	on	DI1 = HIGH
		off	DI1 = LOW
DI2	yellow	on	DI2 = HIGH
		off	DI2 = LOW
DI3/DO1	yellow	on	DI3/DO1 = HIGH
		off	DI3/DO1 = LOW
DI4/DO2	yellow	on	DI4/DO2 = HIGH
		off	DI4/DO2 = LOW
DI5	yellow	on	DI5 = HIGH
		off	DI5 = LOW
DI6	yellow	on	DI6 = HIGH
		off	DI6 = LOW

10.1.2 Extensions in EMS version

Pos.	Colour	Status	Description		
BUS-RDY	green	blinking	Communication has been established		
		on	Communication has been stopped		
		off	Communication is not initialised		
BUS-ERR	red	blinking fast	Communication error For PROFINET: Node not recognised		
		blinking	For PROFINET: Node recognition		
		on	Communication error		
LED1	yellow	-	Signalling controlled by the PLC program with adjustable blinking speed		
LED2					
LED3 (PLC-RDY)	green	flashes	PLC program is not available		
		blinking fast	PLC program is loaded/saved or parameters are saved		
		blinking	PLC program is started		
		on	PLC program is stopped		
		off	PLC status is undefined / device is switched off		
PLC-ERR	red	flashes 3x	Internal system error		
		flashes 2x	Parameter version or checksum invalid		
		flashes	Retain memory error		
		blinking fast	PLC program is stopped by watchdog monitoring		
		blinking	Error		
		off	No error / device switched off		
LED4 (PLC-Com)			Half wave	Half wave coded	DECA
	yellow	flashes 3x	Control bar: full wave	-	-
		flashes 2x	Control bar: negative half wave	-	Pre operational
		flashes	Control bar: positive half wave	-	Silent mode
		blinking fast	-	Command received	Operational
		blinking	Error	Error	Error
		on	-	-	Warning
		off	Control bar: no half wave		Not activated

Pos.	Colour	State	Description
DI7	yellow	on	DI7 = HIGH
		off	DI7 = LOW
DI8	yellow	on	DI8 = HIGH
		off	DI8 = LOW
DI9/DO3	yellow	on	DI9/DO3 = HIGH
		off	DI9/DO3 = LOW
DI10/DO4	yellow	on	DI10/DO4 = HIGH
		off	DI10/DO4 = LOW
DI11	yellow	on	DI11 = HIGH
		off	DI11 = LOW
DI12	yellow	on	DI12 = HIGH
		off	DI12 = LOW
DI13	yellow	on	DI13 = HIGH
		off	DI13 = LOW
DI14	yellow	on	DI14 = HIGH
		off	DI14 = LOW

10.1.3 Status display of the safety system via LEDs at the controller

Status display: drive-based safety

Pos.	Colour	State	Description
S-State	green	on	Communication between standard device and safety system is running
		blinking	Drive-based safety is in service status
		off	Communication between standard device and safety system is not possible
S-Error	red	on	Fault, trouble or warning
		blinking	Drive-based safety is not accepted by the standard device
		off	Error-free operation
S-Acknw	yellow	on	A parameter set acceptance must be acknowledged
S-Enable	yellow	on	Controller is enabled
		blinking	Safety function is active (non-safe display)

The status of safety option 10 is solely shown via the ”S-Enable” display. All other displays have no function.

Danger!

Danger to life due to wrong interpretation of the status display

A wrong interpretation of the status display of the drive-based safety may result in dangerous operating statuses.

Possible consequences:

► Death or severe injuries

Protective measures:

► The status display of the drive-based safety must not be used for safety-related purposes. The displays shown are unsafe.

Legend

The symbols used for indicating the LED states have the following meaning:

	LED flashes once approx. every 3 seconds (slow flash)
	LED flashes once approx. every 1.25 seconds (flash)
	LED flashes twice approx. every 1.25 seconds (double flash)
	LED blinks every second
	LED is permanently on

The LEDs ”DRIVE READY” and ”DRIVE ERROR” can blink in different ways depending on the device states which are explained in the following. This permits an easy device diagnostics without additional tools.

DRIVE READY (green)	DRIVE ERROR (red)	Status	Description
OFF	OFF	→ ”Init” state	**Initialisation is active**
	OFF	→ ”MotorIdent” state	**Motor data identification** – The ”MotorIdent” device state can only be reached by the ”SwitchON” device state and jumps back to that state after the action is completed.
	OFF	→ ”SafeTorqueOff” state	**This state is only possible in relation with a connected safety module and an existing power section supply!**
	OFF	→ ”ReadyToSwitchOn” state	**Device is ready to start** – This is the controller’s state directly after the initialisation has been completed.
	OFF	→ ”SwitchedOn” state	**Device is switched on** – This is the controller’s device state if the DC bus voltage is applied and the controller is still inhibited by the user (controller inhibit).
	OFF	→ ”OperationEnabled” state	**Operation** – In this device state, the motor follows the setpoint defined in the application.
		→ ”Warning” status display	**Operation/warning is active** – This display may occur in all device states if a monitoring mode responds the error response ”Warning” or ”Warning locked” has been parameterised for.
		→ ”TroubleQSP” state	**TroubleQSP is active** – This device state will be active as soon as a monitoring mode responds, the error response ”TroubleQSP” has been parameterised for.
OFF		→ ”Trouble” state	**Message is active** – This device state will be active as soon as a monitoring mode responds, the error response ”Message” has been parameterised for.
OFF		→ ”Fault” state	**Fault is active** – This device state will be active as soon as a monitoring mode responds, the error response ”Fault” has been parameterised for.
OFF		→ ”SystemFail” state	**System fault is active** – This device state will be active if a system fault occurs.

10.1.4 Drive diagnostics via the integrated display

The controller comes with an integrated 7-segment display which can show 4 or 5 characters depending on the device version.

The display has three different modes:

- Automatic display - when the controller is switched on, the parameter saved under the status value 1 is displayed.
- Manual operation display - when controlling the controller in manual operation.
- Message display - in case of errors or warnings. This display has the highest priority and overcontrols the other two modes.

The display is operated by the buttons T1 and T2.

- T1 - operator button for status display of subordinated devices (in preparation).
- T2 - operator button for browsing if several status messages or error messages have occurred at the same time.

Moreover, both buttons must be operated if the device is replaced for importing the safe parameters from the memory module into the safety module. More information on this can be found in the corresponding documentation.

Automatic display

In this mode, five preset parameters can be displayed subsequently. The selection button T2 serves to browse the parameters in ascending order:

- Status value 1: motor output frequency in [Hz]

  The output frequency is displayed as a function of the direction of rotation,i. e. a counter-clockwise rotation is displayed with a minus sign. The display area is between - 999 und 999 Hz with a resolution of 1 Hz.
- Status value 2: actual current value in [A], resolution 0.1 A
- Status value 3: device utilisation in [%]
- Status value 4: motor voltage in [V]
- Status value 5: DC-bus voltage in [V]

Manual operation display (in preparation)

- When the controller is changed over to the manual operation mode with the operator button, ”rc” is displayed.
- If an error is present in manual operation, the display changes between ”rc” and the error code every 0.5 s. If several errors are present, they are displayed alternately.
- When changing between CCW and CW rotation with the operator button, the motor output frequency is displayed without a sign in CW rotation and with a minus sign in CCW rotation.

Message display

If warnings or errors are present, these are shown in blinking mode.

Overview of the error messages of the operating system

The table below lists all error messages of the controller operating system in alphabetically ascending order of the abbreviated designation with the preset error response as well as the parameter for setting the error response, if available.

Group	Error					
ID	Number	Abbr.	Text	Reaction	CAN code	Setting
106						
1	0x0601	PL01	PLC internal	No reaction	-	C00596/1
2	0x0602	PL02	PLC watchdog	No reaction	-	C00596/2
3	0x0603	PL03	PLC parameter error	No Reaction	-	C00596/3
4	0x0604	PL04	PLC retain data error	No reaction	-	C00596/4
21	0x0615	PL21	PLC program generic error 1	No reaction	-	C00596/9
22	0x0616	PL22	PLC program generic error 2	No reaction	-	C00596/10
23	0x0617	PL23	PLC program generic error 3	No reaction	-	C00596/11
24	0x0618	PL24	PLC program generic error 4	No reaction	-	C00596/12
25	0x0619	PL25	PLC program generic error 5	No reaction	-	C00596/13
26	0x061a	PL26	PLC program generic error 6	No reaction	-	C00596/14
27	0x061b	PL27	PLC program generic error 7	No reaction	-	C00596/15
28	0x061c	PL28	PLC program generic error 8	No reaction	-	C00596/16
111						
2	0x0b02	Su02	One mains phase is missing	Warning	0x3000	C00565
3	0x0b03	Su03	Too frequent mains switching	Fault	0x3000	-
4	0x0b04	Su04	CU supplied insufficiently	Fault	0x3000	-
5	0x0b05	Su05	IO supply overload	Warning	0x3000	C00598/4
119						
50	0x1332	OC5	Ixt overload	Fault	0x2000	-
1	0x1301	OH1	Heatsink overtemperature	Fault	0x4000	-
15	0x130f	OH3	Motor temperature (X21) triggered	Fault	0x4000	C00585
0	0x1300	OH4	Heatsink temp. > shutdown temp. -5°C	No reaction	0x4000	C00582

Group	Error					
ID	Number	Abbr.	Text	Reaction	CAN code	Setting
123						
99	0x1763	FC1	Limitation of field controller	No reaction	0xF000	C00570/4
94	0x175e	FCH1	Switching frequency reduction	No reaction	0x2000	C00590
95	0x175f	FCH2	Maximum speed for Fchop	No reaction	0xF000	C00588
57	0x1739	ID1	Error: Motor data identification	WarningLocked	0xF000	-
58	0x173a	ID3	CINH motor data identification	WarningLocked	0xF000	-
59	0x173b	ID4	Error in resistor identification	Warning	0xF000	-
145	0x1791	LP1	Motor phase failure	No reaction	0x3000	C00597
15	0x170f	LU	DC bus undervoltage	Trouble	0x3100	C00600/1
16	0x1710	OC1	Power section short circuit	Fault	0x2000	-
17	0x1711	OC2	Power section earth fault	Fault	0x2000	-
105	0x1769	OC6	I^2xt overload - motor	Warning	0x2000	C00606
7	0x1707	OC7	Motor overcurrent	Fault	0x2000	-
30	0x171e	OC10	Maximum current reached	Fault	0x2000	-
71	0x1747	OC11	Clamp operation active	Warning	0xF000	-
65	0x1741	OC12	I^2xt overload - brake resistor	Fault	0xF000	-
90	0x175a	OC13	Exceedance of maximum current for Fch	Fault	0xF000	-
96	0x1760	OC14	Limitation of direct-axis current controller	No reaction	0xF000	C00570/1
97	0x1761	OC15	Limitation of cross current controller	No reaction	0xF000	C00570/2
98	0x1762	OC16	Limitation of torque controller	No reaction	0xF000	C00570/3
31	0x171f	OC17	Clamp sets pulse inhibit	No reaction	0xF000	C00569/1
32	0x1720	OS1	Maximum speed limit reached	No reaction	0x8400	C00579
1	0x1701	OT1	Maximum torque reached	No reaction	0x8300	C00608
93	0x175d	OT2	Speed controller output limited	No reaction	0xF000	C00567
14	0x170e	OU	DC bus overvoltage	Trouble	0x3100	-
205	0x17cd	SD3	Open circuit - feedback system	Fault	0x7300	C00586
200	0x17c8	SD10	Speed limit - feedback system 12	Fault	0x7300	C00607
201	0x17c9	SD11	Speed limit - feedback system 67	Fault	0x7300	C00607
125						
1	0x1901	An01	AIN1_I < 4 mA	TroubleQuickStop	0xF000	C00598/1
11	0x190b	Io11	DigOut level	Warning	0xF000	C00598/3
127						
2	0x1b02	CE04	MCI communication error	No reaction	0x7000	C01501/1
15	0x1b0f	CE0F	MCI control word	Fault	0xF000	C00594/2
128						
5	0x1c05	EDB1	EMS half wave error	No reaction	-	C00596/5
6	0x1c06	EHV1	EMS PowerwaveFail	No reaction	-	C00596/6
7	0x1907	EPV2	EMS DeCaBus error	No reaction	-	C00596/7

Group	Error					
ID	Number	Abbr.	Text	Reaction	CAN code	Setting
131						
6	0x1f06	CA06	CAN CRC error	No reaction	0x8000	C00592/1
7	0x1f07	CA07	CAN bus warn	No reaction	0x8000	C00592/3
8	0x1f08	CA08	CAN bus stopped	No reaction	0x8000	C00592/4
11	0x1f0b	CA0b	CAN HeartBeatEvent	No reaction	0x8130	C00592/5
15	0x1f0f	CA0F	CAN control word	Fault	0xF000	C00594/2
0	0x1f00	CE4	CAN bus off	No reaction	0x8000	C00592/2
135						
1	0x2301	CE1	CAN RPDO1	No reaction	0x8100	C00593/1
2	0x2302	CE2	CAN RPDO2	No reaction	0x8100	C00593/2
3	0x2303	CE3	CAN RPDO3	No reaction	0x8100	C00593/3
4	0x2304	CP04	CAN RPDO4	No reaction	0x8100	C00593/4
140						
13	0x280d	MCI1	Module missing / incompatible	No reaction	0x7000	C01501/2
144						
1	0x2c01	PS01	No memory module	Warning	0x6300	-
2	0x2c02	PS02	Par.set invalid	Fault	0x6300	-
3	0x2c03	PS03	Device par.set invalid	Fault	0x6300	-
4	0x2c04	PS04	MCI par.set invalid	Fault	0x6300	-
7	0x2c07	PS07	Memory module par. invalid	Fault	0x6300	-
8	0x2c08	PS08	Device par. invalid	Fault	0x6300	-
9	0x2c09	PS09	Par. format invalid	Fault	0x6300	-
10	0x2c0a	PS10	Memory module binding invalid	Fault	-	-
145						
35	0x2d23	dF10	AutoTrip reset	Fault	0xF000	C00189/0
14	0x2d0e	dF14	SW-HW invalid	Fault	0x6100	-
24	0x2d18	dF18	BU RCOM error	Fault	0x6100	-
33	0x2d21	dF21	BU watchdog	Fault	0x6100	-
34	0x2d22	dF22	CU watchdog	Fault	0x6100	-
25	0x2d19	dF25	CU RCOM error	Fault	-	-
50	0x2d32	dF50	Retain error	Fault	0x6100	-
51	0x2d33	dF51	CuCcr error	Fault	0x6100	-
52	0x2d34	dF52	BuCcr error	Fault	0x6100	-

Group	Error						
	ID	Number	Abbr.	Text	Reaction	CAN code	Setting
184							
	1	0x5401	Ck01	Pos. HW limit switch	TroubleQuickStop	0x8600	C00595/1
	2	0x5402	Ck02	Neg. HW limit switch	TroubleQuickStop	0x8600	C00595/2
	7	0x5407	Ck03	Pos. SW limit position	TroubleQuickStop	0x8600	C00595/3
	8	0x5408	Ck04	Neg. SW limit position	TroubleQuickStop	0x8600	C00595/4
	153	0x5499	Ck05	Following error 1	Warning	0x8611	C00595/5
	154	0x549a	Ck06	Following error 2	Warning	0x8611	C00595/6
	155	0x549b	Ck07	Travel range limit exceeded	TroubleQuickStop	0x8612	C00595/7
	156	0x549c	Ck08	Home position unknown	WarningLocked	0x8612	C00595/8
	8005	0x54cd	Ck09	Positioning mode invalid	WarningLocked	0x8600	C00595/9
	8007	0x54cf	Ck10	Profile data implausible	WarningLocked	0x8600	C00595/10
	8009	0x54d1	Ck11	Operating mode invalid	Warning	0x8600	C00595/11
	8014	0x54d6	Ck12	Profile number invalid	WarningLocked	0x8600	C00595/12
	8015	0x54d7	Ck13	Error FB MCKCtrlInterface	Warning	0x8600	C00595/13
	15	0x540f	Ck14	Target position beyond SW limit position	WarningLocked	0x8600	C00595/14
	5	0x5405	Ck15	Error - brake message signal	Fault	0x8600	-
	64	0x5440	Ck16	Time overflow - manual operation	Fault	-	-
400							
	9	0x1a09	dH09	EEPROM power section	Fault	0x5530	-
	16	0x1a10	dH10	Fan failure	Warning	0x5000	C00566/0
	104	0x1a68	dH68	Adjustment data error CU	Fault	0x5530	-
	105	0x1a69	dH69	Adjustment data error BU	Fault	0x5530	-
98x							
0	1	-	US01	User error 1	No reaction	0x6200	C00581/1
1	2	-	US02	User error 2	No reaction	0x6200	C00581/2
2	3	-	US03	User error 3	No reaction	0x6200	C00581/3
3	4	-	US04	User error 4	No reaction	0x6200	C00581/4
4	1	-	US05	User error 5	No reaction	0x6200	C00581/5
5	2	-	US06	User error 6	No reaction	0x6200	C00581/6
6	3	-	US07	User error 7	No reaction	0x6200	C00581/7
7	4	-	US08	User error 8	No reaction	0x6200	C00581/8

Group	
ID	32 bit error number
Number	16 bit hex error number
Abbr.	first part of error message - is also indicated in the device display
Text	Full text - visible in the keypad or Engineer
Reaction	Lenze setting of the response to the error / event
CAN code	CAN emergency error code
Setting	Code for setting the response
SO	Group error - safety option
CI	Group error - fieldbus communication

10.1.5 Drive diagnostics

The controller measures relevant operating parameters which can be displayed using the diagnosis terminal or the PC.

Display of the controller status on the keypad

– If the keypad at the front of the controller is connected to the diagnostic interface X6, the area ① of the LCD displays the controller status via different symbols.

Icon	Meaning	Note
RDY	Controller is switched on.	→ ”SwitchedON” state
RUN	Controller is enabled.	
STP	Application in the controller is stopped.	
QSP	Quick stop is active.	
CINH	Controller is inhibited.	The power outputs are inhibited.
OFF	Controller is ready to start	→ ”ReadyToSwitchOn” state
Mmax	Speed controller 1 in the limitation	The drive is torque-controlled.
Imax	The set current limit is exceeded in motor or generator mode	
IMP	Pulse inhibit is active	The power outputs are inhibited.
ISFLT	System fault is active	
IFLT	Fault	→ ”Fault” state
ITRB	Trouble	→ ”Trouble” state
ITQSP	TroubleQSP	→ ”TroubleQSP” state
WRN	Warning is active	→ ”Warning” status display

Display parameters

The parameters listed in the following table serve to get information on current statuses and actual values of the controller for diagnostic purposes, e.g. with the keypad, via a bus system or using the »Engineer« (when an online connection has been established to the controller)

- In the »Engineer« parameter list and in the keypad, these parameters are classified in the **Diagnostics** category.
- A detailed description of these parameters can be found in the software manual of the prevailing device version.

Parameter	Display
C00183	Device state
C00168	Error number
C00051	Actual speed value
C00052	Motor voltage
C00054	Motor current
C00057/1	Maximum torque
C00057/2	Torque at maximum current
C00059	Motor - number of pole pairs
C00061	Heatsink temperature
C00062	Temp. inside the controller
C00063	Motor temperature
C00064	Device utilisation (I x t) over the last 180 seconds
C00065	Ext. 24-V voltage
C00066	Thermal motor load (I^2xt)
C00178	Time the controller was enabled (elapsed-time meter)
C00179	Time the mains was switched on (power-on time meter)

Identification data

The parameters listed in the following table which are classified in the »Engineer« parameter list and the keypad in the category **Identification → Controller** serve to display the identification data of the controller.

Parameter	Display
C00099	Firmware version
C00200	Firmware product type
C00201	Firmware compilation date
C00203/1 ... 9	HW product types
C00204/1 ... 9	HW serial numbers
C00205/1 ... 6	HW descriptions
C00206/1 ... 6	HW manufacturing data
C00210/1 ... 6	HW version

11 Safety engineering

11.1 Introduction

With increasing automation, protection of persons against hazardous movements is becoming more important. Functional safety describes the measures needed by means of electrical or electronic equipment to reduce or remove danger caused by failures.

During normal operation, safety equipment prevents people accessing hazardous areas. In certain operating modes, e.g. set-up mode, work needs to be carried out in hazardous areas. In these situations the machine operator must be protected by integrated drive and control measures.

Drive-based safety provides the conditions in the controls and drives to optimise the safety functions. Planning and installation expenditure is reduced. In comparison to the use of standard safety engineering, drive-based safety increases machine functionality and availability.

Drive-based safety with L-force | 8400 protec

Unlike control cabinet devices, decentralised drives are frequency inverters which are not locally mounted but directly attached to the application on site. Due to this product-specific property, they must meet demanding requirements for robustness and class of protection.

8400 protec controllers are optionally available with drive-based safety.

”Drive-based safety” stands for applied safety functions, which can be used for the protection of persons working on machines.

The motion functions are continued to be executed by the controller. The drive-based safety monitors the safe compliance with the limit values and provides the safe inputs and outputs. When the limit values are exceeded, the drive-based safety starts the control functions according to EN 60204-1 directly in the controller.

The safety functions are suitable for applications according to IEC 61508 to SIL 3 and achieve a performance level (PL) e and the control category 3 or 4 depending on the safety option according to EN ISO 13849-1.

11.2 Important notes

Application as directed

The controllers of the 8400 protec series that are equipped with drive-based safety must not be modified by the user. This concerns the unauthorised exchange or removal of the drive-based safety.

Danger!

Danger to life through improper installation

Improper installation of safety engineering systems can cause an uncontrolled starting action of the drives.

Possible consequences:

► Death or severe injuries

Protective measures:

► Safety engineering systems may only be installed and commissioned by qualified and skilled personnel.

► All control components (switches, relays, PLC, ...) and the control cabinet must comply with the requirements of ISO 138491 and ISO 13849-2. This includes i.a.:
– Switches, relays with at least IP54 enclosure.
– Control cabinet with at least IP54 enclosure.
– Please refer to ISO 138491 and ISO 13849-2 for all further requirements.

► Wiring must be shielded.

► All safety relevant cables outside the control cabinet must be protected, e.g. by means of a cable duct:
– Ensure that no short circuits can occur.
– For further measures see EN ISO 13849-2.

► If an external force acts upon the drive axes, additional brakes are required. Please observe that hanging loads are subject to the force of gravity!

Danger!

When the ”safe torque off” (STO) function is used, an ”emergency switching-off” according to EN 60204 is not possible without additional measures. There is no electrical isolation, no service switch or repair switch between motor and controller!

“Emergency switching-off” requires an electrical isolation, e.g. by a central mains contactor!

11.3 Overview of safety options

Depending on the device version, the following safety functions are available:

Safety option 10

Due to safety option 10, the following safety functions can be used:

- Safe torque off (STO),
  formerly: safe standstill

If requested, the safe disconnection of the drive is achieved through:

- Directly connected active sensors
- Passive sensors connected to a safety switching device

The safety functions are suitable for applications according to IEC 61508 to SIL 3 and achieve a performance level (PL) e and the control category 4 according to EN ISO 13849-1.

Safety option 20

Due to safety option 20, the following safety functions can be used:

- Safe torque off (STO),
  formerly: safe standstill
- Safe stop 1 (SS1)
- Safe stop emergency (SSE)
- Safe operation mode selector (OMS)
- Safe enable switch (ES)

The safe disconnection of the drive is achieved through:

- a higher-level safety PLC via PROFIsafe/PROFINET
- a higher-level safety PLC via PROFIsafe/PROFIBUS

The functions of the safety option must be parameterised via the »Engineer«.

The motion functions are continued to be executed by the controller. The drive-based safety monitors the safe compliance with the limit values. When the limit values are exceeded, the drive-based safety starts the control functions according to EN 60204-1 directly in the controller.

The safety functions are suitable for applications according to IEC 61508 to SIL 3 and achieve a performance level (PL) e and the control category 3 according to EN ISO 13849-1.

Safety option 30

Due to safety option 30, the following safety functions can be used:

- Safe torque off (STO),
  formerly: safe standstill
- Safe stop 1 (SS1)
- Safe stop emergency (SSE)
- Safe operation mode selector (OMS)
- Safe enable switch (ES)

The safe disconnection of the drive is achieved through:

- a higher-level safety PLC via PROFIsafe/PROFINET
- connected active or passive sensors

The functions of the safety option must be parameterised via the »Engineer«.

The motion functions are continued to be executed by the controller. The drive-based safety monitors the safe compliance with the limit values. When the limit values are exceeded, the drive-based safety starts the control functions according to EN 60204-1 directly in the controller.

The safety functions are suitable for applications according to IEC 61508 to SIL 3 and achieve a performance level (PL) e and the control category 3 according to EN ISO 13849-1.

Further information on functional safety is provided in:

- the 8400 protec manual on drive-based safety
- the 8400 protec software manual on drive-based safety: Parameter setting & configuration

12 Accessories (overview)

Note!
You can find additional information on the accessories in the catalogue to this product series.

12.1 Overview

Coordinated accessories for L-force Inverter Drives 8400 protec:

- Lenze system cables
  – Motor connection
  – Brake resistor connection
  – Incremental HTL encoder
- Memory module
- USB-diagnostic adapter E94AZCUS
  – Connecting cables EWL007x
- PC system bus adapter EMF2173IBxxx/EMF2177IB
- Diagnosis terminal EZAEBK2001
- Brake resistors ERBSxxxRxxxW
- 24-V power supply units EZVxx00-00x
- EMS accessories

12.2 System cables

A wide variety of system cables is available for Lenze motors and controllers. Detailed information is provided in the ”System cables and system connectors” manual.

The available system cables for 8400 protec controllers are listed below.

12.2.1 Motor cable

EYPxxxxAxxxxM07Q10, EYPxxxxAxxxxM07Q11, EYPxxxxAxxxxM08Q10, EYPxxxxAxxxxM08Q11

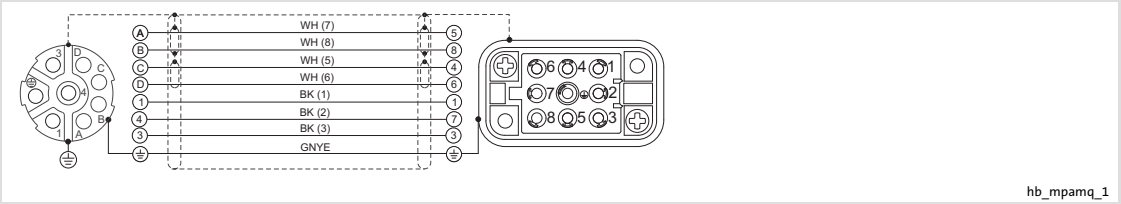

EYPxxxxAxxxxH10Q10, EYPxxxxAxxxxH11Q11

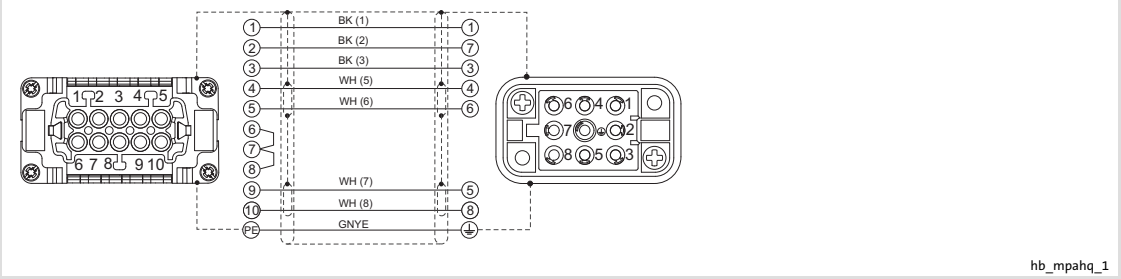

EYPxxxxAxxxxH12Q10, EYPxxxxAxxxxH13Q11

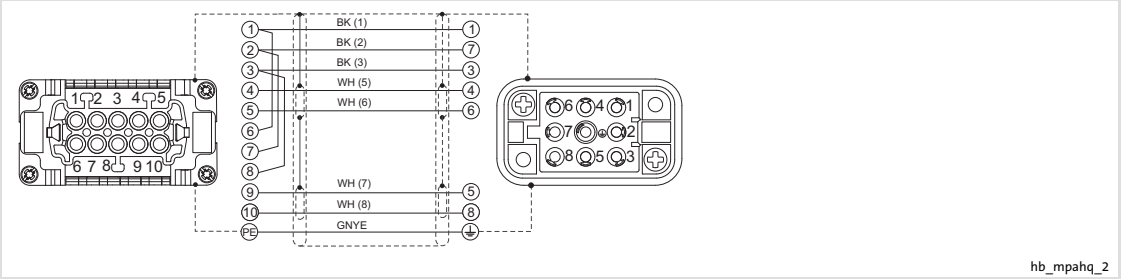

EYPxxxxAxxxxA00Q10, EYPxxxxAxxxxA00Q11

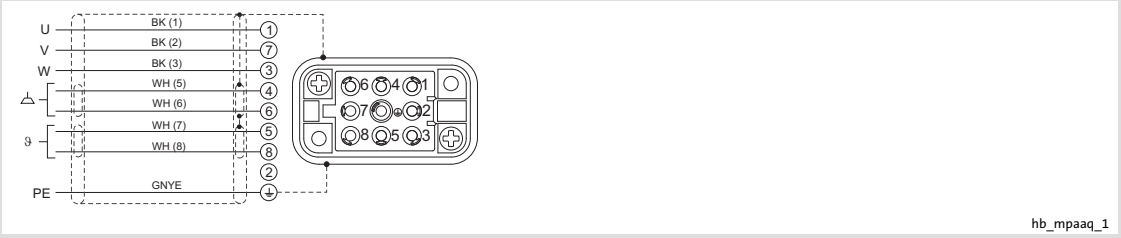

EYPxxxxAxxxxH07Q08, EYPxxxxAxxxxH08Q09

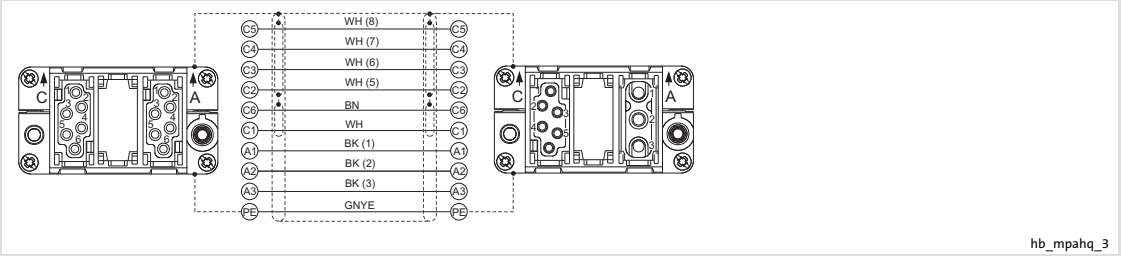

EYPxxxxAxxxxH09Q09

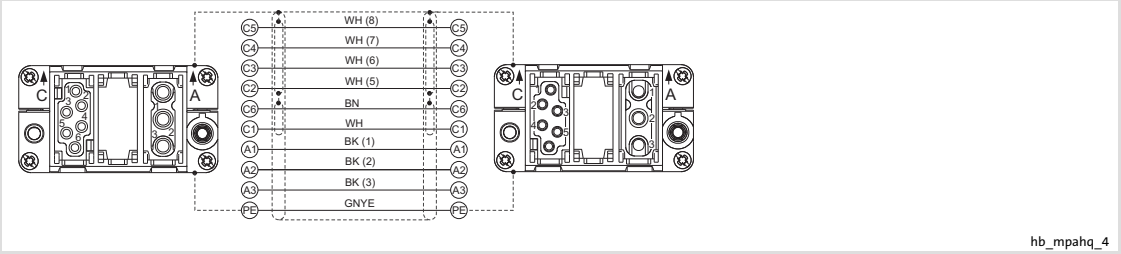

EYPxxxxAxxxxA00Q08, EYPxxxxAxxxxA00Q09

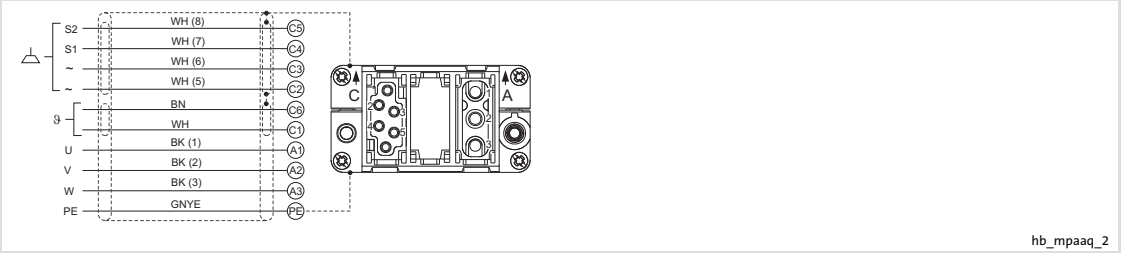

12.2.2 Incremental HTL encoder

EYF0048AxxxxD01B02

EYF0048AxxxxD01A00

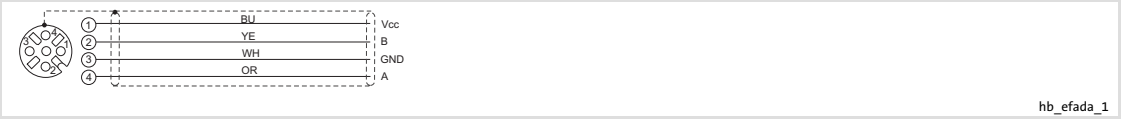

EYF0048AxxxxA00B02

EYF0048AxxxxD01A00, EYF0048AxxxxA00B02, EYF0048AxxxxD01B02

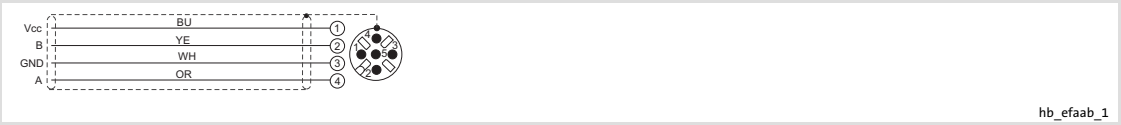

12.2.3 Connection of external brake resistor

EYR0036AxxxxB01A03

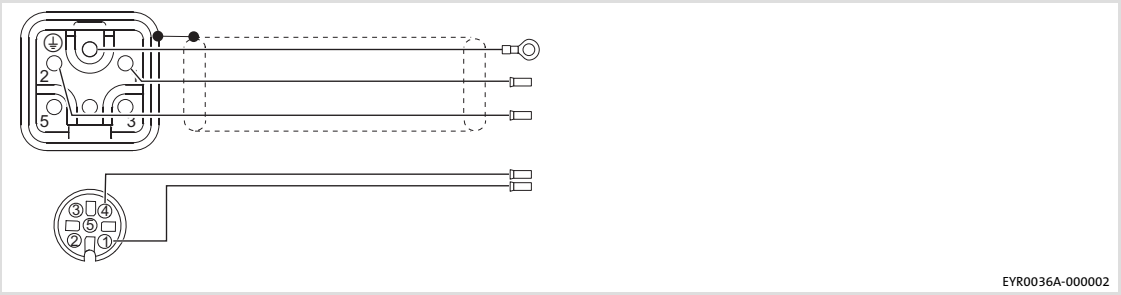

EYR0052AxxxxH18A03

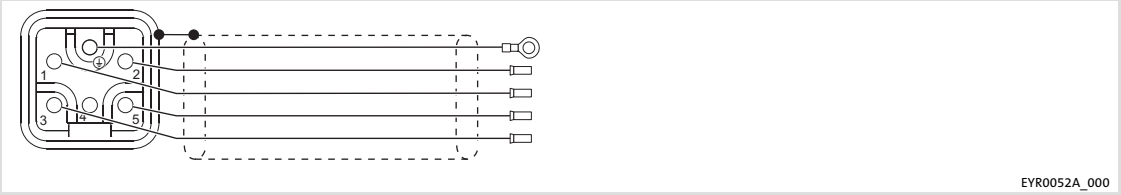

12.2.4 Connection of safety sensors and actuators

EYF0041Axxxxxxxxxx

12.3 Memory module

Stop!

The device contains components that can be destroyed by electrostatic discharge!

Before working on the device, the personnel must ensure that they are free of electrostatic charge by using appropriate measures.

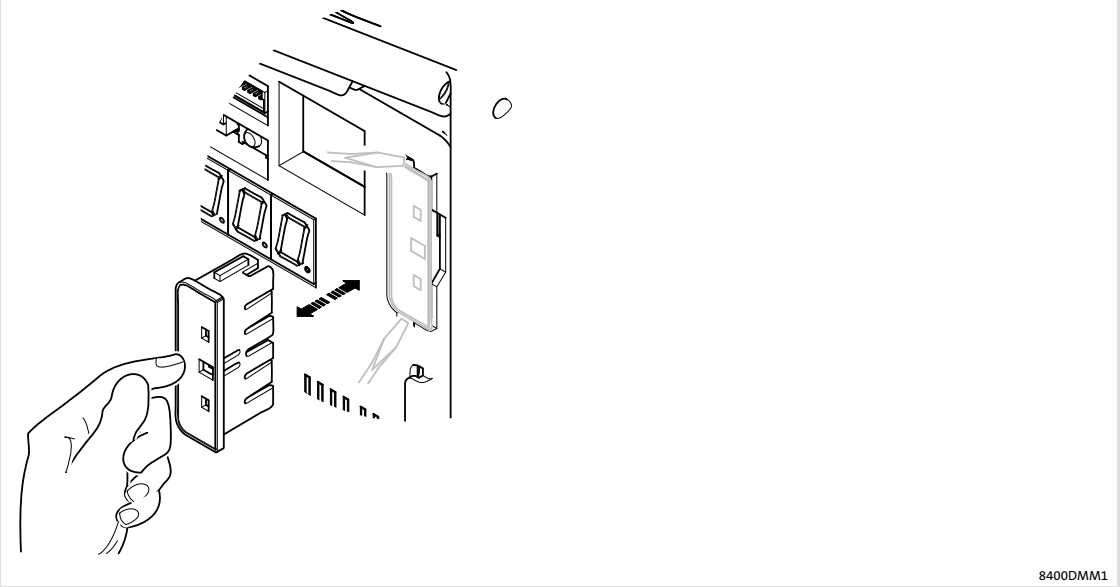

12.3.1 E84AYM10S

Name: Memory module (for StateLine/HighLine version)

Type designation: E84AYM10S (/M = 5 pcs/VPE)

Slot: MMI

The parameters of the controller are stored in the memory module.

The pluggable memory module enables a quick parameter set transfer to an identical controller. Possible reasons for a parameter set transfer are:

- Duplication of similar applications in a series of identical drives.
- Restorage of an application after device replacement.

The required steps for a parameter set transfer are described in the software manual.

In order to remove the memory module, use a suitable screwdriver to lever the module out at the upper and lower groove. In order to plug in the module, insert it into the slot and push it with light pressure until end position is reached.

12.3.2 E84AYM30S

Name: Memory module (for EMS version)

Type designation: E84AYM30S (/M = 5 pcs/VPE)

Slot: MMI

The parameters o the controller are stored in the memory module. Moreover, this module has further memory capacity for PLC programs and retain variables.

The pluggable memory module enables a quick parameter set transfer to an identical controller. Possible reasons for a parameter set transfer are:

- Duplication of similar applications in a series of identical drives.
- Restorage of an application after device replacement.

The required steps for a parameter set transfer are described in the software manual.

In order to remove the memory module, use a suitable screwdriver to lever the module out at the upper and lower groove. In order to plug in the module, insert it into the slot and push it with light pressure until end position is reached.

12.4 Diagnosis terminal

The X400 diagnosis terminal is a simple means for parameter setting and diagnostics on site. Clearly structured menus and a plain text menu grant quick data access. The diagnosis terminal is connected to the X70 diagnostic interface (behind the service hatch). The diagnosis terminal is based on the X400 keypad, extended by a holder and a connecting cable.

Name: Diagnosis terminal X400

Type designation: EZAEBK200x

Slot: X70

Features

- In a robust housing
- Suitable for installation into the control cabinet door
- 2.5 m connecting cable, exchangeable
- Enclosure IP65 is possible for installation into the control cabinet
- Menu-driven diagnostics and parameter setting
- Backlighted graphic display for representing information
- 4 navigation keys, 2 context-sensitive keys
- Adjustable RUN/STOP function
- Hot-plug capable
- Enclosure IP20

12.5 Infrared remote control (IrRC)

The infrared remote control LDEZIRRC serves to execute up to 18 functions. The system-specific functions (key assignment) are described in the documentation of the system.

Change-over from automatic operation to manual infrared operation

► Press [ON] key
– Display: c---

► enter the desired vehicle number (e.g. 020) within 8 s, using the number keys [0 ... 9]
– Display: c020

Note!

If no vehicle number is entered, the control remains in automatic operation and continues to travel, if required!

The vehicle number ensures that the remote control only addresses the control of the desired vehicle.

In manual infrared operation, the automatic distance control is switched off. Moreover, control is even possible with active error (except for internal errors).

Change-over from manual infrared operation to automatic operation

Press [OFF] key

Note!

The manual infrared operation is not reset by switching the mains.

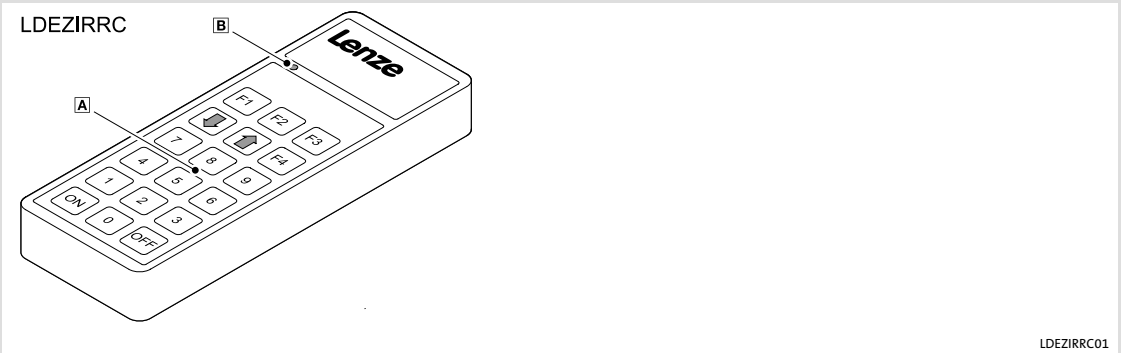

A Key field
B Control LED "Transmit"

12.6 External brake resistors

Assignment of controller - brake resistor

Controller	External brake resistor	
	400 V	500 V
E84Dxxxx7514	ERBS180R350WNQN000	ERBS180R350WNQN000
E84Dxxxx1524		
E84Dxxxx3024	ERBS047R400W ERBS047R800W	ERBS047R400W ERBS047R800W
E84Dxxxx4024		
E84DHxxx7524		

12.7 Power supply units

External power supply units are available for supplying the control electronic with an external 24-V supply, if required.

Advantages of an external supply: Parameter setting and diagnostics of the controller with a deenergised mains input.

	Mains		Secondary	
Type	V_{LN} [V]	I_{LN} [A]	V_{DC} [V]	I_{DC} [A]
EZV1200-000	230 (1/N/PE AC)	0.8	24 (22.5 ... 28.5)	5
EZV2400-000		1.2		10
EZV4800-000		2.3		20
EZV1200-001	400 (3/PE AC)	0.3		5
EZV2400-001		0.6		10
EZV4800-001		1.0		20

12.8 EMS accessories

- LDEZHMTX - half wave transmission module

  Interface module for the half-wave command selection (transmission module) via a control bar between the mobile control at the vehicle and the stationary system. The connection of up to 8 channels is possible.

- LDEZHMRX - half wave reception module

  Interface module for the half-wave feedback (reception module) via a signalling bar between the mobile control at the vehicle and the stationary system. The connection of up to 8 channels is possible.

- LDEZPW10238Kxx - Power wave

  Communication module with up to 1023 commands for data exchange between the stationary system centre and the mobile control at the vehicle. For communicating with the central PLC, PROFIBUS-DP, DeviceNet or INTERBUS CU are available.

- LDEZLDC1Kxx - rail bus local data concentrator

  Communication module (master) for data exchange between the system PLC and the bus transfer unit on the rail bus or inductive data transfer. Depending on the communication medium, an LDEZLMDC (contact conductor rail bus) or an LDEZLMIDAT (inductive data transfer) interface can be connected.

- LDEZLMDC - rail bus CAN bus driver module

  Interface module - CAN bus driver for the rail bus, (implementation TTL -> 50 V DC) for plugging onto the data concentrator (master - bus transfer unit) LDEZLDC1KPB, LDC1KDN, for bidirectional data exchange with mobile control.

- LDEZIRDS - infrared station with fieldbus link

  The infrared station is used for bidirectional data exchange between the stationary system PLC and the mobile control at the vehicle.

  Vehicle-specific process data and maintenance data can be transmitted. Communication is possible with central PLC via PROFINET I/O, (PROFIBUS DP, EtherNet /IP and DeviceNet on request).

- LDEZEXIRD - external infrared module (remote control receiver with LED display)

  The external infrared module serves to be connected to a Lenze control system CCU/ICU series with LDEZDrive PLCC and is an external display as well as an infrared remote control receiver. The connection to the LDEZDPLCC is made via the system bus (CAN) which provides the option to mount it to any position of the vehicle.

13 Appendix

13.1 Declarations of conformity

Lenze

2233986.09

EU-Konformitätserklärung	EU Declaration of Conformity

LENZE SE, Hans-Lenze-Strasse 1, 31855 Aerzen GERMANY

erklärt in alleiniger Verantwortung die Übereinstimmung der Produkte	declares under sole responsibility compliance of the products
Antriebsregler der Baureihen:	Controllers of the series:

E84Duvwx7514xxyxxz
E84Duvwx1524xxyxxz
E84Duvwx3024xxyxxz
E84Duvwx4024xxyxxz
E84Duvwx7524xxyxxz

u = D, E, F, H, L, P, S
v = B, D, H, M, P
w = B, C, F, G, H, J, K, V
x = 0...9, A...Z
y = B, C, D, S
z = E, N, R

mit der	with the
Niederspannungsrichtlinie 2014/35/EU	**Low Voltage Directive** 2014/35/EU
Angewandte harmonisierte Normen:	**Applied harmonized standards:**

EN 61800-5-1:2007 + A1:2017

EMV- Richtlinie 2014/30/EU	**EMC Directive** 2014/30/EU
Angewandte harmonisierte Normen:	**Applied harmonized standards:**

EN 61800-3:2004 + A1:2012
EN IEC 61800-3:2018

Ökodesignrichtlinie 2009/125/EG **Verordnung** 2019/1781 [≥01.07.2021]	**ErP Directive** 2014/34/EU **Commission Regulation** 2019/1781 [≥01.07.2021]
Angewandte Normen:	**Applied standards:**

EN 61800-9-2:2017

RoHS Richtline 2011/65/EU **Verordnung** 2015/863 + 2017/2102	**RoHS Directive** 2011/65/EU **Commission Regulation** 2015/863 + 2017/2103
Angewandte harmonisierte Normen:	**Applied harmonized standards:**

EN IEC 63000:2018

Die Sicherheitshinweise der Betriebanleitung sind zu beachten.	The safety instructions of the manual are to be considered.
Die aufgeführten Produkte sind im Sinne der EMV- Richtlinie keine eigenständig betreibbare Produkte. Die Einhaltung der Richtlinie setzt den korrekten Einbau der Produkte, die Beachtung der spezifischen Installationshinweise und der Produktdokumentation voraus. Dies wurde an bestimmten Anlagenkonfigurationen nachgewiesen.	According to the EMC directive, the listed devices are not independently operable products. Compliance of the directive requires the correct installation of the product, the observance of specific installation notes and product documentation. This was tested on specific system configurations.
Die Produkte sind bestimmt zum Einbau in Maschinen. Die Inbetriebnahme ist solange untersagt bis festgestellt wurde, dass die Maschine, in welche diese Produkte eingebaut werden sollen, den Bestimmungen der o.g. EU-Richtlinie entsprechen.	These products are intended for installation in machines. Operation is prohibited until it has been determined that the machines in which these products are to be installed, conforms to the above mentioned EU Directive.

Ort / Datum Place / date	**Vorstand** Chief Technology Officer	**Dokumentationsverantwortlicher** Responsible for documentation
Aerzen 12.05.2021	*Dipl.-Ing. Frank Maier*	i.V. T. Pieper *i.V. Torsten Pieper*

Lenze

2251689.07

EU-Konformitätserklärung | EU Declaration of Conformity

LENZE SE, Hans-Lenze-Strasse 1, 31855 Aerzen GERMANY

erklärt in alleiniger Verantwortung die Übereinstimmung der Produkte | declares under sole responsibility compliance of the products

8400 protec
E84DxxxxxxxxxxxJxx (SO10)

mit der | with the

Maschinenrichtlinie
2006/42/EG Anhang VIII und IX

Machinery Directive
2006/42/EC Annex VIII and IX

Angewandte harmonisierte Normen: | **Applied harmonized standards:**

Sicherer Halt	Stopp Kategorie 0	EN 60204-1	:2018	Stop category 0	Safe torque off
	Kategorie 4 Performance Level (PL): PL e	EN ISO 13849-1	:2015	Category 4 Performance Level (PL): PL e	
Sicherheitsfunktionen siehe Betriebsanleitung.	SIL 3	EN 61508 1-7 EN 62061 +AC +A1 +A2 EN 61800-5-2 EN 61800-5-1 +A1	:2010 :2005 :2010 :2013 :2015 :2017 :2007 :2017	SIL 3	For safety functions see manual.

Konformitätsbewertung | **Conformity assessment**

CE 0035

Benannte Stelle	**notified body**	TÜV Rheinland Industrie Service GmbH Am Grauen Stein 51105 Köln / Germany	
Zertifikate	Certificates	01/205/5146.02/21	
Gültigkeit	Date of expiry	2026-09	

EMV- Richtlinie
2014/30/EU

EMC Directive
2014/30/EU

Angewandte harmonisierte Normen: | **Applied harmonized standards:**

EN 61800-3:2004 + A1:2012
EN 61800-3:2018

RoHS- Richtline
2011/65/EU

RoHS Directive
2011/65/EU

Angewandte harmonisierte Normen: | **Applied harmonized standards:**

EN IEC 63000:2018

Die Sicherheitshinweise der Betriebanleitung sind zu beachten.

The safety instructions of the manual are to be considered.

Die Produkte sind bestimmt zum Einbau in Maschinen. Die Inbetriebnahme ist solange untersagt bis festgestellt wurde, dass die Maschine, in welche diese Produkte eingebaut werden sollen, den Bestimmungen der o.g. EU-Richtlinie entsprechen.

These products are intended for installation in machines. Operation is prohibited until it has been determined that the machines in which these products are to be installed, conforms to the above mentioned EU Directive.

Ort / Datum
Place / date

Aerzen 21.09.2021

Geschäftsführer
Managing Director

Dipl.-Ing. Frank Maier

Dokumentationsverantwortlicher
Responsible for documentation

i.V. T. Wedemeyer

i.V. T. Wedemeyer

Lenze

2251690.06

EU-Konformitätserklärung | EU Declaration of Conformity

LENZE SE, Hans-Lenze-Strasse 1, 31855 Aerzen GERMANY

erklärt in alleiniger Verantwortung die Übereinstimmung der Produkte | declares under sole responsibility compliance of the products

8400 protec - E84DxxxxxxxxxxxKxx (SO20)
8400 protec - E84DxxxxxxxxxxxLxx (SO30)

mit der | with the

Maschinenrichtlinie
2006/42/EG Anhang VIII und IX

Machinery Directive
2006/42/EC Annex VIII and IX

Angewandte harmonisierte Normen: | **Applied harmonized standards:**

		EN 60204-1	**:2018**		
	Kategorie 3 Performance Level (PL): PL e	**EN ISO 13849-1**	**:2015**	Category 3 Performance Level (PL): PL e	
Sicherheitsfunktionen siehe Betriebsanleitung.	SIL 3	**EN 61508 1-7** **EN 62061** **+AC +A1 +A2**	**:2010** **:2005** **:2010 :2013 :2015**	SIL 3	For safety functions see manual.
		EN 61800-5-2	**:2017**		
		EN 61800-5-1 +A1	**:2007 :2017**		

Konformitätsbewertung | **Conformity assessment**

CE 0035

	Benannte Stelle	**notified body**	TÜV Rheinland Industrie Service GmbH Am Grauen Stein 51105 Köln / Germany
	Zertifikate	Certificates	01/205/5146.02/21
	Gültigkeit	Date of expiry	2026-09

EMV- Richtlinie
2014/30/EU

EMC Directive
2014/30/EU

Angewandte harmonisierte Normen: | **Applied harmonized standards:**

EN 61800-3:2004 + A1:2012
EN 61800-3:2018

RoHS- Richtline
2011/65/EU

RoHS Directive
2011/65/EU

Angewandte harmonisierte Normen: | **Applied harmonized standards:**

EN IEC 63000:2018

Die Sicherheitshinweise der Betriebanleitung sind zu beachten.

The safety instructions of the manual are to be considered.

Die Produkte sind bestimmt zum Einbau in Maschinen. Die Inbetriebnahme ist solange untersagt bis festgestellt wurde, dass die Maschine, in welche diese Produkte eingebaut werden sollen, den Bestimmungen der o.g. EU-Richtlinie entsprechen.

These products are intended for installation in machines. Operation is prohibited until it has been determined that the machines in which these products are to be installed, conforms to the above mentioned EU Directive.

Ort / Datum
Place / date

Aerzen 21.09.2021

Geschäftsführer
Managing Director

Dipl.-Ing. Frank Maier

Dokumentationsverantwortlicher
Responsible for documentation

i.V. T. Wedemeyer

Lenze

2460406.00

UK Declaration of Conformity

Manufacturer

LENZE SE, Hans-Lenze-Strasse 1, 31855 Aerzen GERMANY

Authorised representative

LENZE Ltd., 6, Abbey Court Fraser Road Priory, Business Park, MK44 3WH Bedford

declares under sole responsibility compliance of the products

8400 protec
E84DxxxxxxxxxxxJxx (SO10)

with the

The Supply of Machinery (Safety) Regulations 2008 — S.I. 2008 No. 1597

Applied designated standards:

Safe torque off	EN 60204-1	:2018		
	EN ISO 13849-1	:2015	Category 4 Performance Level: PL e	
For safety functions see manual.	EN 61508 1-7	:2010		
	EN 62061	:2005		SIL 3
	+AC +A1 +A2	:2010 :2013 :2015		
	EN 61800-5-2	:2007 + 2017		
	EN 61800-5-1 + A1	:2007 :2017		

Conformity assessment

UK CA	Approved Body	TUV Rheinland UK Ltd 1011 Stratford Road Solihull, B90 4BN Approved Body No. 2571
	Certificates	01/205U/5146.00/22
	Date of expiry	2026-09

The Electromagnetic Compatibility Regulations 2016 — S.I. 2016 No. 1091

Applied designated standards:

EN 61800-3:2004 + A1:2012
EN IEC 61800-3:2018

The Ecodesign for Energy-Related Products and Energy Information Regulations 2021

Applied designated standards:

EN 61800-9-2:2017

The Restriction of the Use of Certain Hazardous Substances in Electrical and Electronic Equipment Regulations 2012 — S.I. 2012 No. 3032

Applied designated standards:

EN IEC 63000:2018

The safety instructions of the manual are to be considered.

These products are intended for installation in machines. Operation is prohibited until it has been determined that the machines in which these products are to be installed, conforms to the above mentioned Regulations.

Place / date	Chief Technology Officer	Responsible for documentation
Aerzen 09.05.2022	*Dipl.-Ing. Frank Maier*	*i.V. Torsten Wedemeyer*

Lenze

2460409.00

UK Declaration of Conformity

Manufacturer

LENZE SE, Hans-Lenze-Strasse 1, 31855 Aerzen GERMANY

Authorised representative

LENZE Ltd., 6, Abbey Court Fraser Road Priory, Business Park, MK44 3WH Bedford

declares under sole responsibility compliance of the products

8400 protec - E84DxxxxxxxxxxxKxx (SO20)
8400 protec - E84DxxxxxxxxxxxLxx (SO30)

with the

The Supply of Machinery (Safety) Regulations 2008 — S.I. 2008 No. 1597

Applied designated standards:

Safe torque off	EN 60204-1	:2018		
	EN ISO 13849-1	:2015	Category 3 Performance Level: PL e	
For safety functions see manual.	EN 61508 1-7	:2010		
	EN 62061 +AC +A1 +A2	:2005 :2010 :2013 :2015		SIL 3
	EN 61800-5-2	:2007 + 2017		
	EN 61800-5-1 + A1	:2007 :2017		

Conformity assessment

UK CA	Approved Body	TUV Rheinland UK Ltd 1011 Stratford Road Solihull, B90 4BN Approved Body No. 2571
	Certificates	01/205U/5146.00/22
	Date of expiry	2026-09

The Electromagnetic Compatibility Regulations 2016 — S.I. 2016 No. 1091

Applied designated standards:

EN 61800-3:2004 + A1:2012
EN IEC 61800-3:2018

The Ecodesign for Energy-Related Products and Energy Information Regulations 2021

Applied designated standards:

EN 61800-9-2:2017

The Restriction of the Use of Certain Hazardous Substances in Electrical and Electronic Equipment Regulations 2012 — S.I. 2012 No. 3032

Applied designated standards:

EN IEC 63000:2018

The safety instructions of the manual are to be considered.

These products are intended for installation in machines. Operation is prohibited until it has been determined that the machines in which these products are to be installed, conforms to the above mentioned Regulations.

Place / date	Chief Technology Officer	Responsible for documentation
Aerzen 09.05.2022	*Dipl.-Ing. Frank Maier*	*i.V. Torsten Wedemeyer*

REGULATION (EU) 2019/1781

8400 protec frequency inverter

Product information acc. to REGULATION (EU) 2019/1781 (ANNEX I, Section 4)

Power losses							
0; 25	f; I	%	3.6	1.8	1.5	1.4	0.7
0; 50	f; I	%	3.8	2.0	1.6	1.5	0.9
0; 100	f; I	%	4.2	2.3	2.0	1.9	1.2
50; 25	f; I	%	3.7	1.8	1.5	1.4	0.8
50; 50	f; I	%	3.8	2.0	1.7	1.6	0.9
50; 100	f; I	%	4.2	2.4	2.1	2.0	1.4
90; 50	f; I	%	3.9	2.1	1.7	1.6	1.0
90; 100	f; I	%	4.3	2.5	2.2	2.1	1.5
Standby losses		%	1.6	0.8	0.5	0.4	0.2
Efficiency level			IE2	IE2	IE2	IE2	IE2
Manufacturer			Lenze SE · Hans-Lenze-Str. 1 · 31855 Aerzen · GERMANY				
Commercial registration number			Hannover HRB 204803				
Product's model identifier			E84D□□□□7514	E84D□□□□1524	E84D□□□□3024	E84D□□□□4024	E84D□□□□7524
Apparent output power		kVA	1.5	2.4	4.6	5.9	10
Indicative motor rated power output		kW	0.75	1.5	3	4	7.5
Rated output current		A	2.4	3.9	7.3	9.5	16
Maximum operating temperature		°C	45				
Rated supply frequency		Hz	50				
Rated supply voltage		V	400				
Switching frequency		kHz	4				
Rated apparent output power		kVA	1.71	3.3	5.85	7.38	14.4

□	Placeholder for product variants
Operating point (f; I)	f = relative motor stator frequency; I = relative torque-producing current
Power losses	Power losses at operating points (f; I) and in standby mode relate to the rated apparent output power. For power losses for options (e.g. for diagnostics) and for accessories (e.g. mains chokes) please refer to further product documentation on the product web page.

13.3 Index

7-segment display, 167

A

Accessories, 178
- external brake resistor, 153

Ambient conditions
- climatic, 42
- mechanical, 42

Analog input, 93

Analog inputs, 66

Application as directed, 175

Application, as directed, 175

Automatic display, 167

B

Basic insulation, 10

Brake resistor
- Selection, 154
- Wiring, 155

Braking, 150

Braking operation, 150
- DC injection brake DCB, 150
- Inverter motor brake, 151
- Stopping of the ramp function generator, 151
- with external brake resistor, 153
- with internal brake resistor, 153
- without brake resistor, 150

C

Cable
- For control connections, 82, 115
- for the motor connection, 81, 114, 179

Cables
- cross-sections, 50, 53
- fuses, 50, 53

CAN on board, 102

CAN port, 29

CANopen, 102, 139

CANopen master PLC, 139

Commissioning, 140
- before initial switch-on, 141

Commissioning steps, 146, 148

Concepts, Mains connection, 32

Configuration, Display functions, 161

Connection, safety sensors and actuators, 183

Contactors, in the motor cable, 20

Control cable, 82, 115

Control terminals, 64, 92, 128

Control voltage, 61

D

Definition of notes used, 13

Definitions, Terms, 10

Device protection, 20, 74, 107, 184

Diagnosis terminal, 186

Diagnostics, 92, 128, 161

Digital inputs, 64, 96, 130
- StateLine C, connection of an HTL incremental encoder, 97, 132

Digital outputs, 65, 96, 130

Display
- 7-segment, 167
- operating status, 161

Display functions, 161

Disposal, 16

Double insulation, 10

Drive behaviour, Influence of the motor cable length, 77, 110

E

Electrical installation
- EMS, 106
- HighLine/StateLine, 73

EMC, what to do in case of interferences, 85, 118

EMS, 25, 28, 45, 60, 64, 65, 67
- extensions, 30, 163
- interfaces, 67
- mains connection concepts, 36

EN 61000-3-2, 43

Enclosure, 41

Extensions, EMS, 30, 163

F

Free space, 42

Functional insulation, 10

Fuses, 50, 53
- operation with rated power, 400 V (UL), 50, 53

G

General data, 40

H

Half-wave system, technical data, 45

Harmonic currents, limitation according to EN 61000-3-2, 43

Holding brake, 10

I

Identification, 22

Infrared
- interface, 31
- remote control, 30

Infrared remote control (IrRC), 187

Installation, electrical
- EMS, 106
- HighLine/StateLine, 73

Installation, mechanical, 70

Integrated display, 167

Interface
- CAN, 29
- IrDA, 31

Interfaces, EMS, 67

Interferences, eliminating EMC interferences, 85, 118

IrDA, 31

IRRC, 66

IrRC, 30

L

LED display, 161

LEDs, 161
- safety system, 164

Legal regulations, 175

M

Mains connection, Concepts, 32

Mains connection concept
- DECA bus, 38
- half wave (coded), 36
- inductive, 39
- Power wave, 37

Mains connection concepts, EMS, 36

Mains current, 48, 51

Manual operation display, 167

Mechanical installation, 70

Memory module, 184
- E84AYM10S, 184
- E84AYM30S, 185

Message display, 168

Motor cable, 81, 114, 179
- capacitance per unit length, 43
- contactors in the, 20
- Influence of the length, 77, 110
- length, 42
- requirements, 43

Motor end, switching on the, 20

Motor holding brake, 10

Motor power, typical, 48, 51

Motor protection, 20

Mounting clearance, 72

Mounting place, 42

Mounting position, 42

N

Nameplate, 22

Noise emission, 43

Noise immunity, 43

Notes, definition, 13

O

Operating conditions, 42
- ambient conditions
  climatic, 42
  mechanical, 42

Operating status, display, 161

Operation, Overcurrent, 56

Output power, 48, 51

Overspeeds, 20

Overview
- Accessories, 178
- standard devices, 27
- terminals, 59

P

Pollution, 42

Power bus, 34

Power system, 42

Product description, 21

Protection of persons, 20

Protective insulation of control circuits, 41

Protective measures, 41

Q

Quick commissioning
- with keypad control, 146
- with terminal control, 148

R

Reinforced insulation, 10

Remote control
- IRRC, 66
- IrRC, 30

Requirements, motor cable, 43

Residual hazards, 20

Rocker switch, 143

RS422 PLC, 135, 137

RS485 PLC, 135, 136

S

Safety, safety engineering, 174

Safety engineering, 174

Safety instructions, 14
- definition, 13
- layout, 13

Safety sensors and actuators, connection, 183

Safety system
- Safety option 10, 176
- Safety option 20, 176
- Safety option 30, 177
- Safety options, overview, 176

Site altitude, 42

Spring-applied brake, 10

Supply conditions, 42
- mains, 42
- motor, 42

Supply voltage
- 24 V external, 62
- 24 V internal, 61

Switch-on, check before initial switch-on, 141

Switching on the motor side, 20

Synchronous serial interface (SSI), 66, 99, 134

T

Technical data, 40
- General data, 40
- IRDA, 67
- IRRC, 66
- Operating conditions, 42

Terminals, 59

Terms
- Controller, 10
- definitions, 10
- Drive, 10

Total index, 197

Type code, finding, 22

V

Validity, documentation, 8

W

Wiring, Brake resistor, 155

X

X34, 67

X45, 64

X46, 64

X47, 64

X48, 64

X81, 67

X82, 67

© 09/2026

Lenze SE
Postfach 10 13 52 · 31763 Hameln
Hans-Lenze-Str. 1 · 31855 Aerzen
GERMANY
Hannover HRB 204803

+49 5154 82-0

sales.de@lenze.com

www.lenze.com

Service

Lenze Service GmbH
Breslauer Straße 3 · 32699 Extertal

GERMANY

008000 2446877 (24 h helpline)

+49 5154 82-1112

service.de@lenze.com

EDS84DPS424 ■ 13553590 ■ EN ■ 6.2 ■ TD00

10 9 8 7 6 5 4 3 2 1